Data
Systems

PHILIPS

Service Manual

Video Display Unit (H1200)

A PUBLICATION OF
PHILIPS DATA SYSTEMS
APELDOORN, THE NETHERLANDS.

PUB. NO. 5122 993 28681

DATE AUGUST 1977

Great care has been taken to ensure that the information contained in this handbook is accurate and complete. Should any errors or omissions be discovered, however, or should any user wish to make a suggestion for improving this handbook, he is invited to send the relevant details to:

PHILIPS DATA SYSTEMS
SERV. DOC. AND TRAINING DEPT.
P.O. BOX 245, APELDOORN,
THE NETHERLANDS.

Copyright © by PHILIPS DATA SYSTEMS.
All rights strictly reserved. Reproduction or issue to third parties in any form whatever is not permitted without written authority from the publisher.

		CONTENTS	page 0-5 thr 0-6
CHAPTER 1		THEORY	1-1 thr 1-37
	1.1	INTRODUCTION	1-3
	1.2	TECHNICAL DATA	1-3
	1.2.1	Display Characteristics	1-3
	1.2.2	Communication Interface	1-4
	1.2.3	Keyboard	1-5
	1.2.4	Primary Power	1-6
	1.2.5	Environmental	1-7
	1.2.6	Physical Characteristics	1-7
	1.2.7	Model Identification	1-8
	1.3	PHYSICAL DESCRIPTION	1-8
	1.3.1	Baseplate	1-8
	1.3.2	Cover	1-8
	1.3.3	Monitor Cage Assembly	1-8
	1.3.4	Logic Board Assembly	1-11
	1.3.5	Keyboard Assembly	1-11
	1.3.6	Power Supply Assembly	1-11
	1.4	PRINCIPLES OF OPERATION	1-11
	1.4.1	Operation Flow	1-11
	1.4.2	Keyboard Logic	1-13
	1.4.3	Input/Output Logic	1-13
	1.4.4	T-Pulse Genrator and Baud Rate Divider	1-14
	1.4.5	TV-Synchroniser and System Timing	1-14
	1.4.6	Memory System	1-14
	1.4.7	Memory Edit and Control	1-15
	1.4.8	Video Refresh Control	1-17
	1.4.9	Video Generation Logic	1-17
	1.4.10	Monitor Circuits	1-18
	1.4.11	Power Supply and Distribution	1-18
	1.5	EXTERNAL INTERFACE	1-18
	1.5.1	Interface Signals	1-18
	1.5.2	Interface Logic Levels	1-19
	1.5.3	Signal Functions (EIA/V24)	1-19
	1.5.4	Transmitted/Received Word Structure	1-20
	1.6	OPTIONS	1-20
	1.6.1	Baud Rate Selection	1-20
	1.6.2	Screen Capacity	1-20
	1.6.3	Lower Case Character Displayed	1-21
	1.6.4	Built In Modem	1-21
	1.6.5	Auxiliary Interface	1-21
	1.6.6	N-Pad Keyboard	1-22
	1.6.7	202C Communications Interface	1-22
	1.6.8	Answerback	1-22
	1.6.9	Parallel Printer Interface	1-22
	1.6.10	Current Loop Interface	1-22
	1.6.11	National Variants	1-22

1.7	FUNCTIONAL DESCRIPTION	1-23
1.7.1	Keyboard	1-23
1.7.2	Input/Output Logic	1-24
1.7.3	T-Pulse Generator and Baud Rate Divider	1-25
1.7.4	TV-Synchroniser and System Timing	1-26
1.7.5	Memory System	1-28
1.7.6	Memory Edit and Control	1-29
1.7.7	Video Refresh Control	1-33
1.7.8	Video Generation	1-34
1.7.9	Monitor Electronics	1-35
1.7.10	Power Supply	1-37

CHAPTER 2	MAINTENANCE	page 2-1 thr 2-17
2.1	TOOLS	2-2
2.2	MATERIALS	2-2
2.3	PREVENTIVE MAINTENANCE	2-2
2.3.1	Cleaning	2-2
2.3.2	Picture Quality	2-2
2.4	SAFETY PROCEDURES	2-2
2.5	TROUBLE SHOOTING	2-3
2.5.1	Trouble shooting Sequence	2-3
2.5.2	Trouble shooting Arrangement	2-9
2.6	REPLACEMENTS	2-10
2.6.1	Display Unit Cover	2-10
2.6.2	Keyboard	2-10
2.6.3	Power Supply	2-10
2.6.4	Logic Board Assembly	2-11
2.6.5	Monitor Cage	2-11
2.6.6	Monitor Control Board	2-13
2.6.7	CRT	2-13
2.7	ADJUSTMENTS	2-15
2.7.1	Monitor Control Board	2-15
2.7.2	Monitor Alignment	2-15
2.7.3	60 Fields per Second Adjustment	2-17

CHAPTER 3	DIAGRAMS	page 3-1 thr 3-19
3.1	KEY TO DIAGRAMS	3-2
3.1.1	Board Layout	3-2
3.1.2	Logic Symbols	3-3
3.1.3	Electrical Symols	3-3
3.2	SIGNAL NAMES	3-4
3.3	INTERCONNECTIONS	3-7
3.3.1	External Interfaces	3-7
3.3.2	Internal Interfaces	3-8
3.4	DIAGRAMS	3-9

CHAPTER 4		PARTS CATALOGUE	page 4-1 thr 4-20
	4.1	MONITOR	4-3
	4.1.1	Monitor complete	4-3
	4.1.2	Rear view	4-4
	4.1.3	Front view	4-5
	4.1.4	Power supply assy	4-6
	4.1.5	Miscellaneous	4-7
	4.1.6	BIM	4-8
	4.2	LOGIC BOARD 1	4-9
	4.2.1	Miscellaneous	4-10
	4.3	LOGIC BOARD 2	4-11
	4.3.1	Miscellaneous	4-12
	4.4	PARTS IN STANDARD KEYBOARD	4-13
	4.4.1	Survey of keyboards	4-15
	4.5	N-PAD KEYBOARD	4-19
CHAPTER 5		INSTALLATION	page 5-1 thr 5-9
	5.1	PACKING and UNPACKING	5-2
	5.2	INSTALLATION	5-2
	5.2.1	Unit	5-2
	5.3	INSTALLATION OF THE OPTIONS	5-2
	5.3.1	Bout Rate	5-2
	5.3.2	Screen Capacity Extension	5-4
	5.3.3	Lower Case Character Displayed	5-6
	5.3.4	Built in Modem	5-6
	5.3.5	N-Pad Keyboard	

Chapter 1: Theory

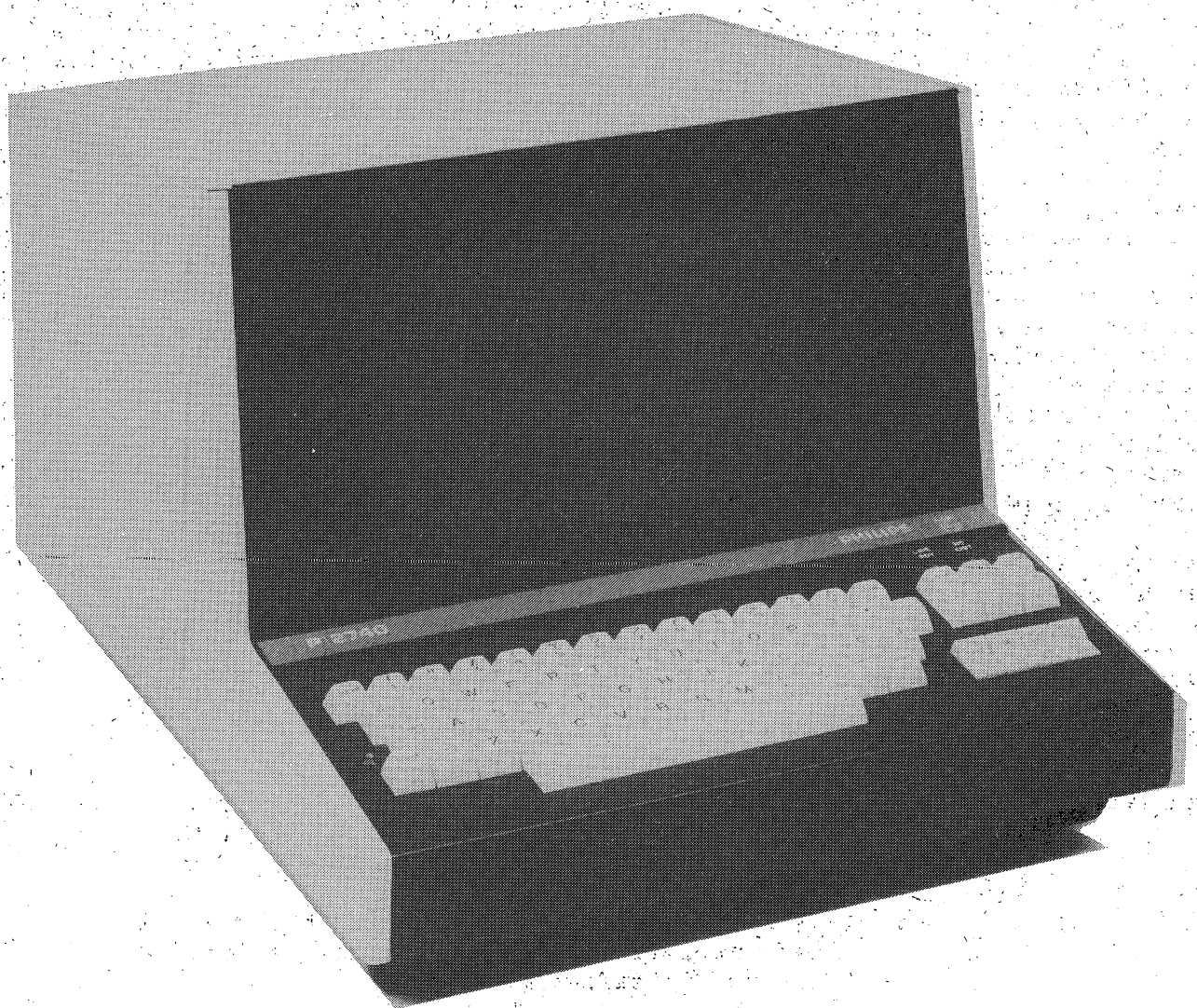

Figure 1-1

1.1 INTRODUCTION

Figure 1.1

The Video Display Unit (VDU) is a compact desktop unit providing a computer dialogue from remote locations

Data is transfered asynchronously between terminal and computer either by direct connection (V-24) or by connection to a modem. Telephone communication can vary between d.c. local networks and switched telephone networks. Full or Half Duplex modes of communication are availible on the VDU at a variety of standard Baud Rates. Duplex mode and a High or Low baud rate can be selected from keyboard mounted switches. A rear panel switch selects the Parity of the transmitted data which may be odd, even or none. In the Full Duplex Mode typed characters are not automatically displayed by the VDU and hence the computer system is normally operated in "echo" mode. In Half Duplex mode typed characters are transmitted and displayed automatically.

Alpha-numeric (A/N) data, and control functions may be entered from the standard teletypewriter keyboard. The VDU displays characters at a single level of intensity controlled by the contrast control. Received data (and transmitted data in Full Duplex) must contain Cursor Return (CR) and Line Feed (LF) characters to display consecutive lines of A/N data.
A Backspace character (BS) is transmitted when entered from the keyboard and causes the cursor to move backwards one character on the screen.
Further control codes exist (CLEAR and HOME) to bring the cursor to the top lefthand corner of the display. The position of the next character to be entered is located by a box cursor with covered characters being displayed in reverse video.

Options exist for an internal modem (BIM), auxiliary numeric keypad and thermal printer.

1.2 TECHNICAL DATA

1.2.1 Display Characteristics

Character Capacity	:	12 lines of characters; 80 characters per line; screen capacity - 960 characters. Optional 24 line version available.
CRT Display	:	12 -inch diagonal crt; standard raster - 312 lines, 50 frames/second; optional raster-264 lines 60 frames/second.
Character Style	:	5 x 7 dot matrix pattern.
Character Repertoire:		64 alphanumerics and symbols (95 characters with lower case option). 32 ASCII control codes.

Character Size	:	Nominal character height 0.125 inch (3.175 mm). Nominal character width 0.94 inch (23.876 mm).
Memory Type	:	MOS 1024 x 7 dynamic shift register.
Cursor	:	Box cursor - displays reverse video when positioned over character.
Cursor Control	:	Either from keyboard in half duplex mode of operation or via received data interface.
Status Lights	:	Two status lights are provided as standard to indicate the operational state of the system. They are: POWER ON and PARITY ERROR. Additional status lights located on the keyboard are provided for use with options.
Refresh Rate	:	50 fields per second. (60 fields per second optional).

1.2.2 Communication Interface

Data Transmission	:	Standard - 300, 9600 baud; optional 75, 110, 150, 200, 600, 900, 1200, 1800, 2400, 4800.
Data Interface	:	EIA RS-232-C/CCITT V24 with; a. Bell 103A type data set compatible. b. Bell 202C type data set compatible (optional). c. 16x baud rate clock. d. Optional 20 mA current loop interface. Data set cable is 2 meters (6.6 feet) long and fixed to the terminal. A Cinch or Cannon DB-25P connector is used. (Optional length 3 meters- 10 feet).
Modes of Operation	:	Half Duplex, Full Duplex. A two-position rocker switch on the keyboard permits duplex mode selection.
Parity	:	Generates and checks parity. Three position slide switch on rear panel permits selection of; a. Odd parity b. Even parity c. No parity (transmitted parity bit always a "one").

Parity Error displayed as '?' on screen and also illuminated PARITY ERROR indicator.
Indicator extingquished by ERROR RESET key.

1.2.3 Keyboard

The keyboard consists of;
a. Teletypewriter format for alphanumerics.
b. Switch cluster for operational mode selection.

Table 1.1 gives the ISO 7-bit code table for the keyboard with lower case option. Positions A1 through A5 are for NATIONAL VARIATIONS which are given in Table 1.2.

Column / Row		0000 (0)	0001 (1)	0010 (2)	0011 (3)	0100 (4)	0101 (5)	0110 (6)	0111 (7)
0000	(0)	NUL	DLE	space	0	A2	P		P
0001	(1)	SOH	DC1	!	1	A	Q	a	q
0010	(2)	STX	DC2	"	2	B	R	b	r
0011	(3)	ETX	DC3	A1	3	C	S	c	s
0100	(4)	EOT	DC4	$	4	D	T	d	t
0101	(5)	ENQ	NAK	%	5	E	U	e	u
0110	(6)	ACK	SYN	&	6	F	V	f	v
0111	(7)	BEL	ETB	'	7	G	W	g	w
1000	(8)	BS	CAN	(	8	H	X	h	x
1001	(9)	HT	EM	)	9	I	Y	i	y
1010	(A)	LF	SUB	*	:	J	Z	j	z
1011	(B)	VT	ESC	+	;	K	A3	k	{
1100	(C)	FF	FS	,	<	L	A4	l	i
1101	(D)	CR	GS	-	=	M	A5	m	}
1110	(E)	SO	RS	.	>	N	^	n	~
1111	(F)	SI	US	/	?	O	_	o	DEL

Table 1.1

Code positions / Countries	A1	A2	A3	A4	A5
	2/3	4/0	5/B	5/C	5/D
Germany, Austria Luxemburg, Switzerland	#	§	Ä	Ö	Ü
Great Britain, New Zealand, South Africa, Netherlands, Belgium	£	@	[	\	]
France, Belgium Switzerland, Luxemburg	£	à	o	Ç	§
Spain, Argentina, Venezuela, Mexico and other Spanish speaking South American countries	£	@	[	Ñ	]
Italy, Switzerland	£	§	o	Ç	É
Sweden, Finland	#	É	Ä	Ö	Å
Denmark, Norway	£	@	Æ	ø	Å
Portugal, Brasil	£	@	Ã	C	Õ
USA, Canada, Australia	#	@	[	\	]
Yugoslavia	£	Ž	Ó	Č	Š

Table 1.2

The keyboard also contains the following additional keys.

a. BRK
b. System Reset
c. BSP
d. Error Reset
e. Clear
f. Home
g. ETB
h. CAN

Keyboard indicators are activated when the appropriate option has been specified as follows.

Indicator	Used with - Option
SHIFT LOCK	Lower Case (typewriter)
LINE RDY	
NO XMIT	202C

1.2.4 Primary Power

Primary Power : 200 watts, 50Hz or 60Hz 115/230 volts nominal.
Low: 97-118/194-236 VAC
Medium: 101-123/198-246 VAC
High: 108-132/216-264 VAC

Circuit Protection	:	DC power supply shuts down automatically for over-voltage, short-circuit, or over-temperature condition. Power supply may be reset by turning primary power off for three seconds.

1.2.5 Environmental

Temperature	:	10 to 40°C.
Humidity	:	90% relative humidity, non-condensing.

1.2.6 Physical Characteristics (Nominal)

Dimensions with	:	Height: 12.0 inches (30.5 cm) Width : 15 inches (38.1 cm) Depth : 20.0 inches (50.0 cm)
Weight with keyboard:		39½ LBS (17.9 kg)
Electrical Cable/ Connector Interfaces:		
Display to Data Set	;	6.6 foot (2 meters) cable from display terminated with DB25-P connector (Cannon or Cinch). (Optional 10 foot (3 meters)).
Display to Power Source	;	7 foot (2.13 meters) cable, 3 wire, fixed to display (50 Hz equipments have no power plug, 60 Hz equipments have molded 3 connector plugs).

1.2.7 Model Indentification

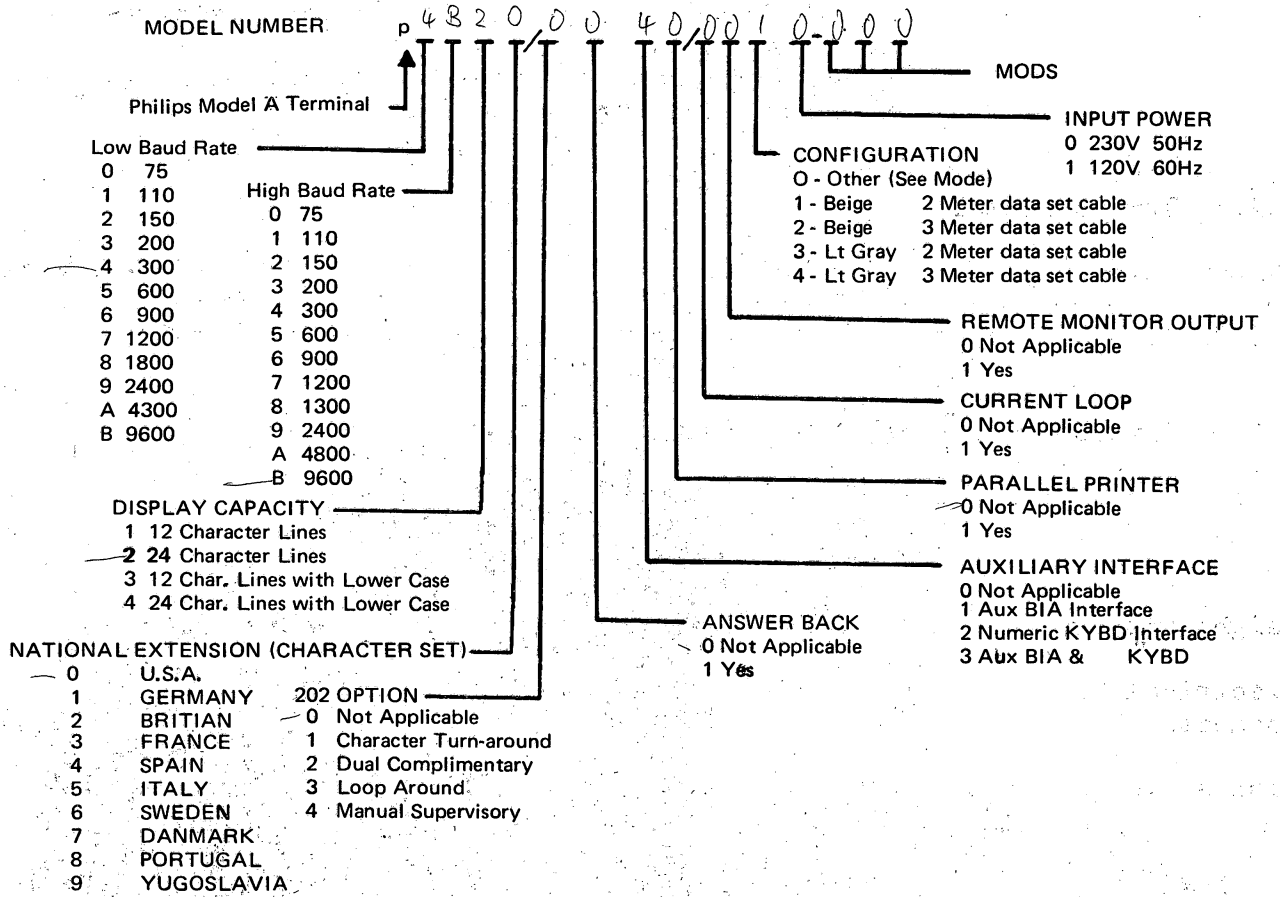

1.3 PHYSICAL DESCRIPTION

Figures 1.2 & 1.3

The VDT contains several subassemblies which are briefly described in the following sections.

1.3.1 Base Plate

The VDU is constructed using modular subassemblies. These are fastened to the pan shaped baseplate and are interconnected by flat-flexible wiring cables and connectors. The entire VDT may be disassembled using a Phillips head screwdriver.

1.3.2 Cover

The cover is a one piece unit held captive to the baseplate by 4 quick release Dimco slide-fasteners. The perspex faceplate is inserted into the cover using preformed runners.

1.3.3 Monitor Cage Assembly

This assembly contains the cathode ray tube (CRT) and the Monitor printed circuit board. The CRT is secured to a wire frame by four screws, the MU-metal screen is retained to the CRT by two tension springs. The monitor board is secured to the wire frame via four metal clips and interconnected by a set of Molex plugs.

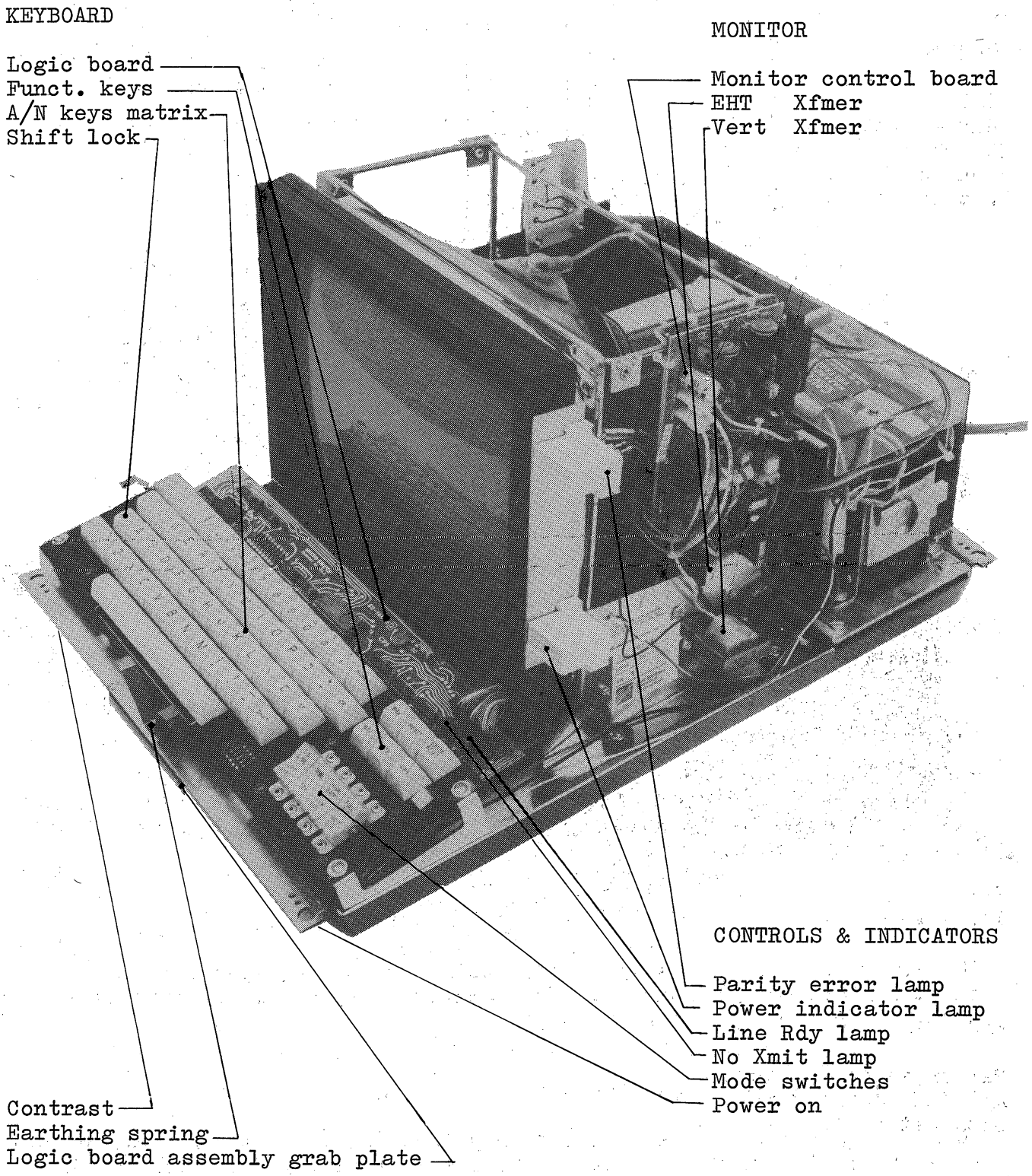
KEYBOARD
Logic board
Funct. keys
A/N keys matrix
Shift lock
MONITOR
Monitor control board
EHT Xfmer
Vert Xfmer
CONTROLS & INDICATORS
Parity error lamp
Power indicator lamp
Line Rdy lamp
No Xmit lamp
Mode switches
Power on
Contrast
Earthing spring
Logic board assembly grab plate

Figure 1-2

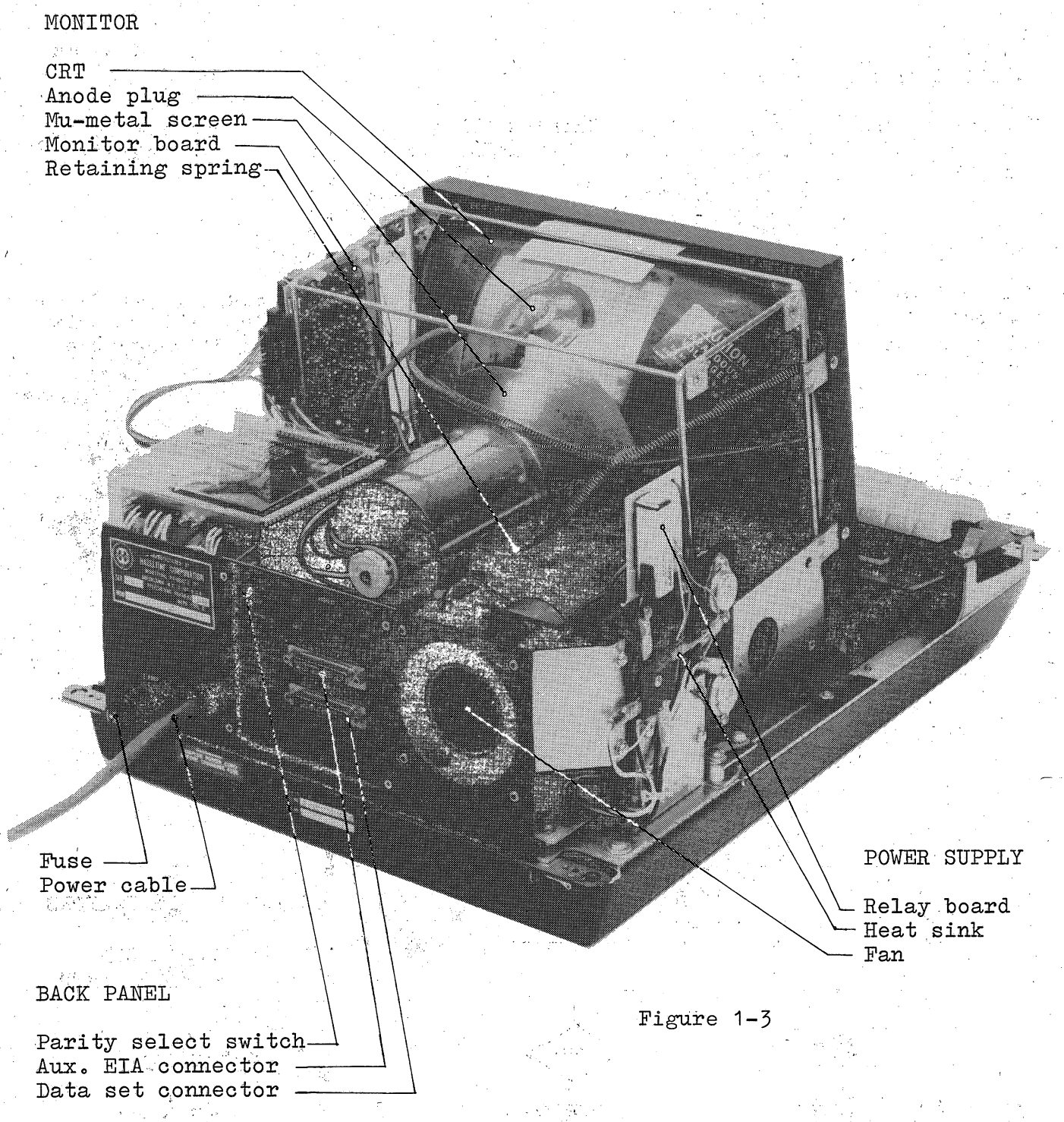
MONITOR
CRT
Anode plug
Mu-metal screen
Monitor board
Retaining spring
Fuse
Power cable
BACK PANEL
Parity select switch
Aux. EIA connector
Data set connector
POWER SUPPLY
Relay board
Heat sink
Fan

Figure 1-3

1.3.4 Logic Board Assembly

The Logic Board Assembly is mounted under the monitor and keyboard assemblies by means of two slotted channels. The assembly consists of two boards which may be removed or inserted by the grab-plate connected to Logic Board 1. Physical mounting of the boards is achieved by plastic snap-in standoffs (component sides facing) while electrical connection is via a flat-flexible cable.

1.3.5 Keyboard Assembly

Mounted to the front of the unit this assembly contains the keyboard logic PCB connected to which are the A/N key matrix and operating mode indicators and switches.

1.3.6 Power Supply Assembly

This modular subassembly consists of a mounting plate to which are attached the power transformer, the regulator board, fan and heat sink. Programable selection of supply voltage is by selector boards inserted just above the transformer.

1.4 PRINCIPLES OF OPERATION

Figure 1-4

The principle of operation is initially described in a flowchart outlining the principle operations and data flows.A more detailed description of each of the functional elements is then given.

1.4.1 Operation Flow

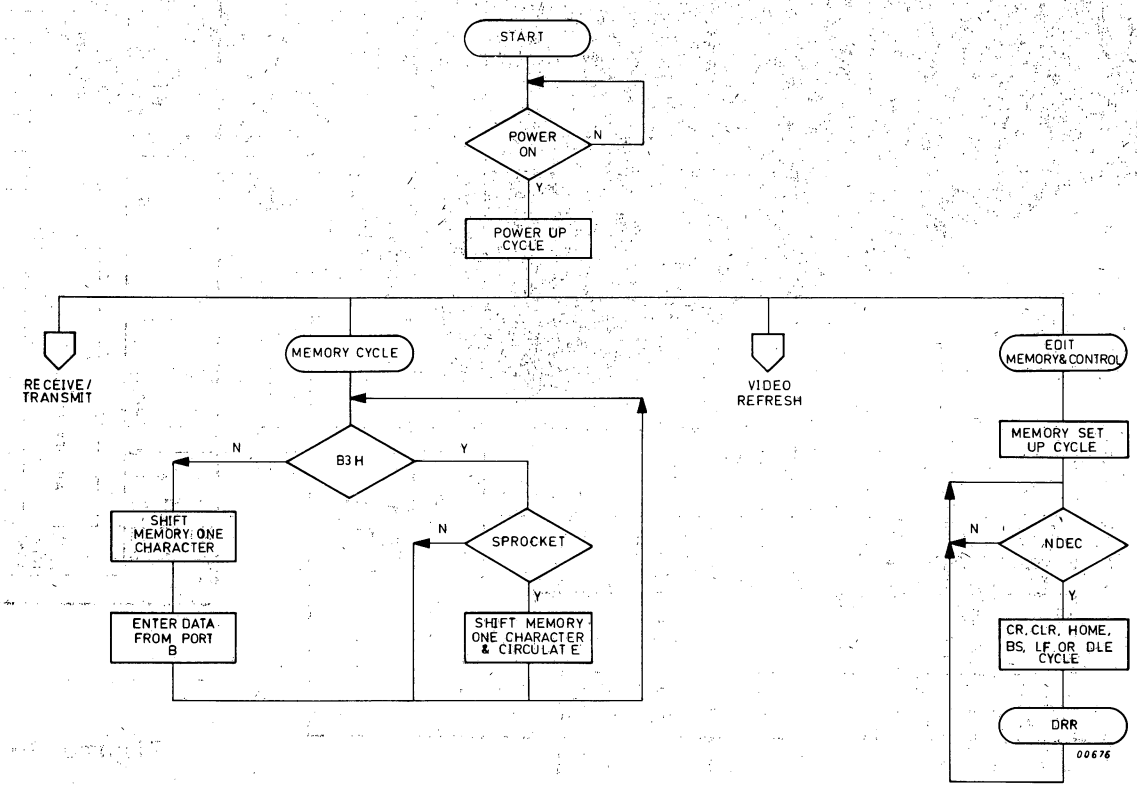

Figure 1-4

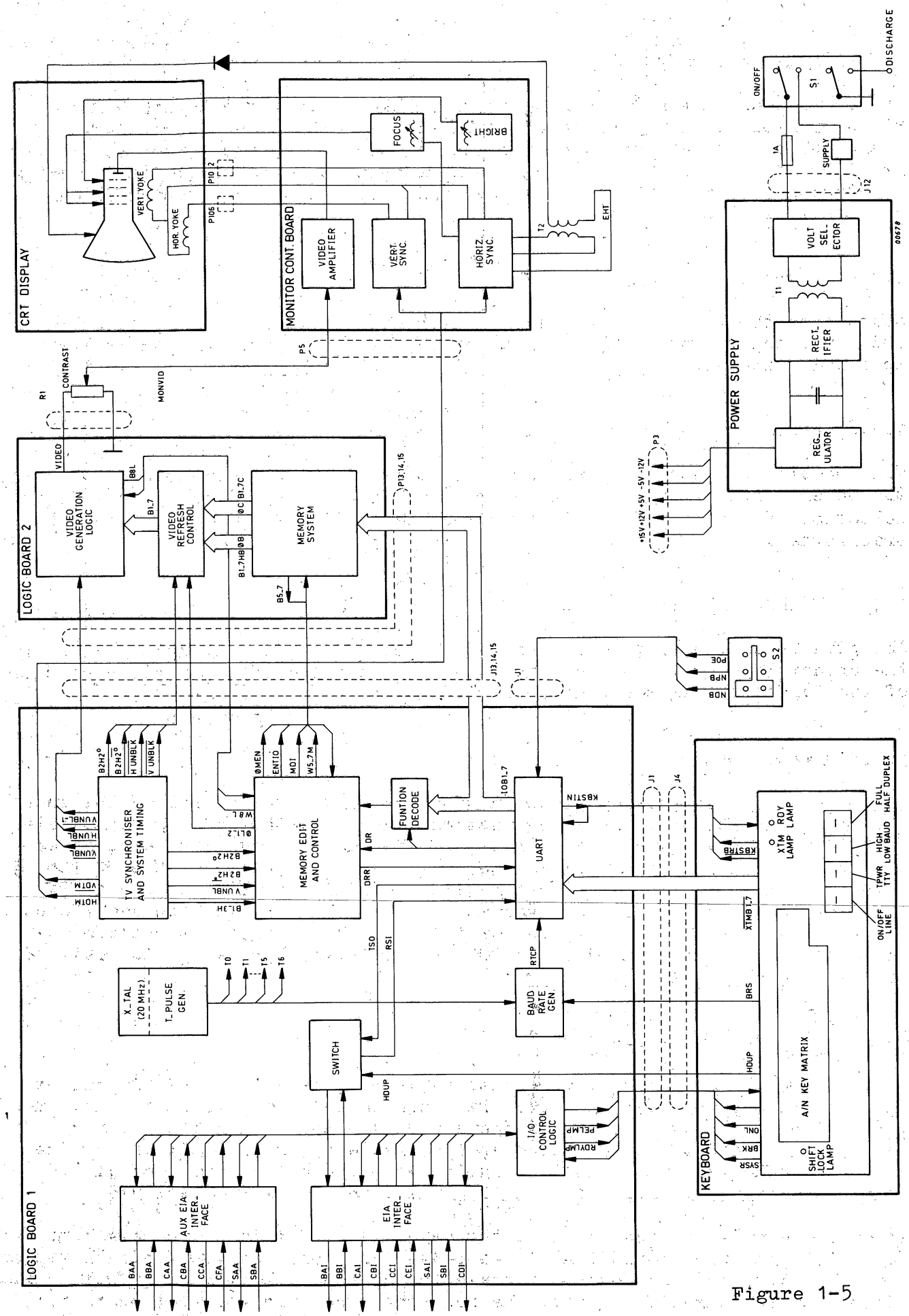
CRT DISPLAY
VERT. YOKE
HOR. YOKE
MONITOR CONT. BOARD
VIDEO AMPLIFIER
VERT. SYNC.
HORIZ. SYNC.
FOCUS
BRIGHT
EHT
CONTRAST
MONVID
LOGIC BOARD 2
VIDEO GENERATION LOGIC
VIDEO REFRESH CONTROL
MEMORY SYSTEM
POWER SUPPLY
VOLT SEL. ECTOR
RECT. IFIER
REG. ULATOR
ON/OFF
S1
DISCHARGE
SUPPLY
LOGIC BOARD 1
TV SYNCHRONISER AND SYSTEM TIMING
MEMORY EDIT AND CONTROL
FUNTION DECODE
UART
X_TAL (20 MHz)
T_PULSE GEN.
BAUD RATE GEN.
SWITCH
I/O CONTROL LOGIC
AUX EIA INTER-FACE
EIA INTER-FACE
KEYBOARD
XTM LAMP
RDY LAMP
A/N KEY MATRIX
SHIFT LOCK LAMP
FULL HALF DUPLEX
HIGH LOW BAUD
TPWR TTY
ON/OFF LINE

Figure 1-5

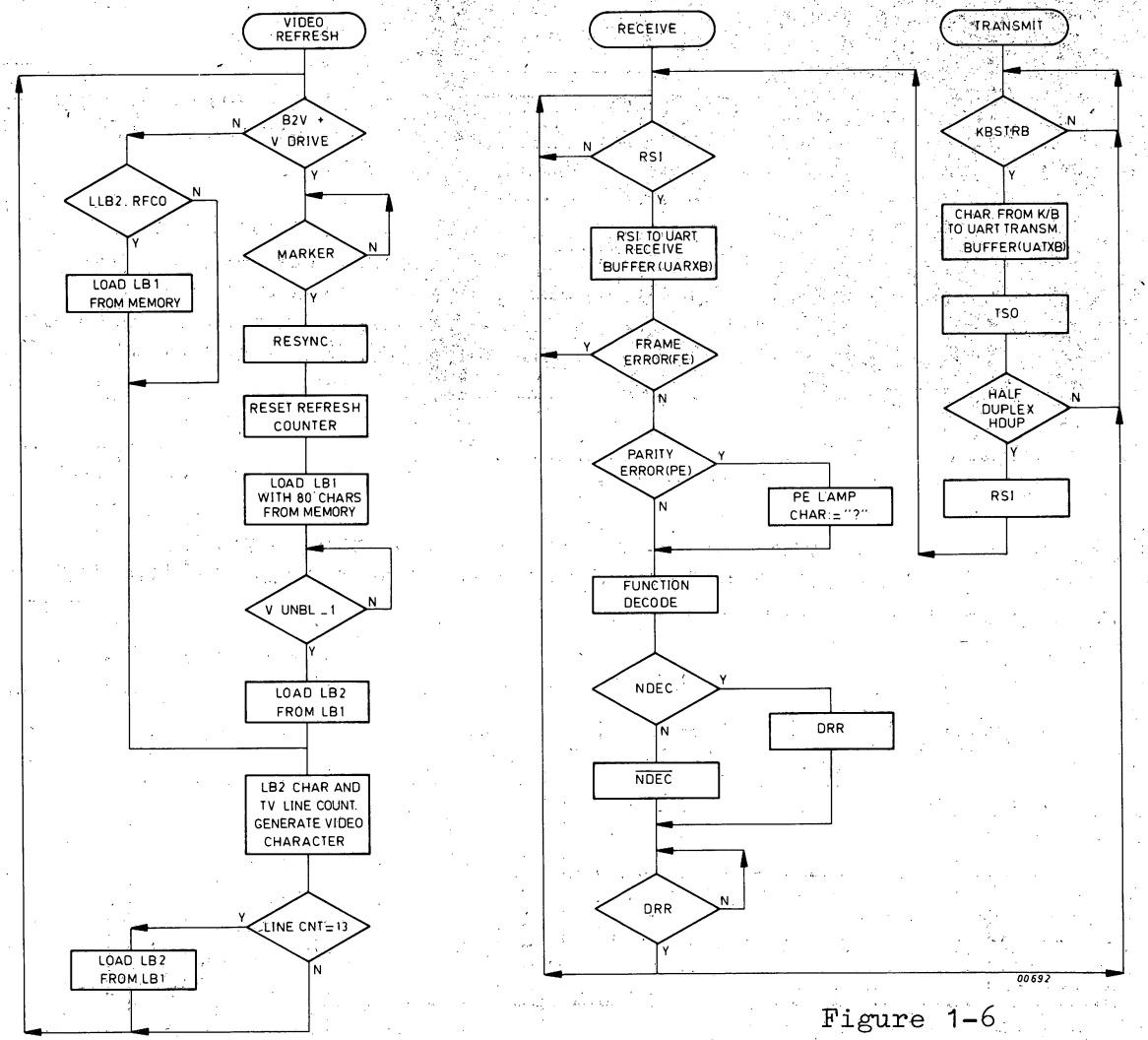

Figure 1-6

1.4.2 Keyboard Logic

This logic converts the depression of a key on the key matrix to the inverse of the ISO 7-bit code for that character together with a strobe signal (KBSTRB) signifying stable state of that data. This conversion is done by a keyboard encoder LSI device which accepts pulses on two of the 13 lines from the matrix and together with the CTRL and SHIFT keys and TTY mode switch produces the key code as per the table 1.1 in Technical Data. Other mode keys produce outputs for the duration of their depression exept the BRK key which produces a 200 ms pulse. The key matrix is designed to allow n-key rollover.

1.4.3 Input/Output Logic

This logic controls the flow of data between the keyboard, EIA interface and the Memory and Display logic. Data transmission and reception is controlled by the Universal Asynchronous Receiver and Transmitter (UART) LSI device. In the Half Duplex mode typed characters are transmitted to line and also displayed while in Full Duplex mode characters are transmitted and not displayed. Data received from the line is always displayed.

When valid data is received from the keyboard or EIA interface the Input/Output logic enables the function decoder. The received ISO 7-bit character is decoded to produce control signals to the Memory Edit and Control logic. These control signals initiate the relevant procedure for that character, either entering the character into memory or modifying the contents of memory.

1.4.4 T-Pulse Generator and Baud Rate Divider

A crystal controlled 21.732 MHz master clock is used to derive precise timing pulses (T0 to T6) which are used throughout the system. These pulses have a period of 644 ns with a pulse width of 92 ns.

The rate of transmission and reception of data is controlled by the BAUD RATE CLOCK which is fed to the UART and is 16 times the actual Baud Rate. The BAUD rates are generated by using counters to devide down the system clock TG to give the required rate. Any two of the rates available may be selected by jumper wires. A keyboard mode switch controls the use of the High or Low Baud Rate.

1.4.5 TV-Synchroniser and System Timing

Figure 1-7

The synchroniser logic generates the necessary timing waveforms for raster generation, video display and memory control. The timing derivations are given in Figure 1-7

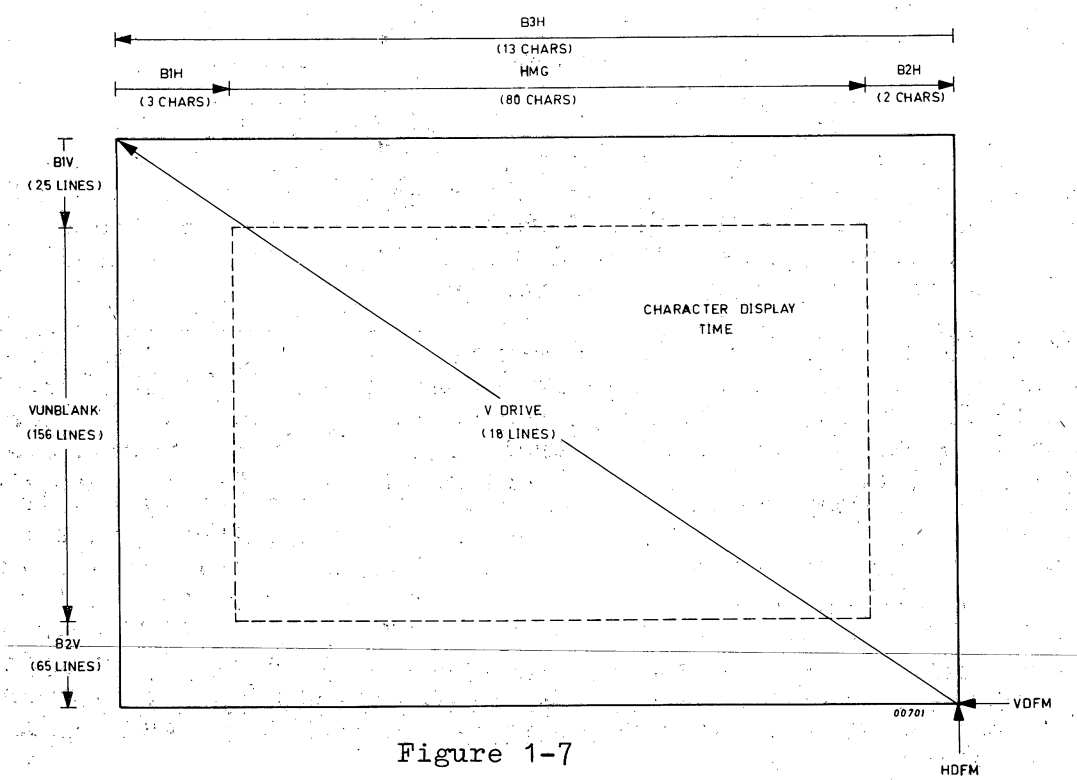

Figure 1-7

The vertical timing cycle (during which the complete display generation occurs) consists of 312 TV lines subdivided into an upper margin (B1V), character display time (V-UNBLANK), lower margin (B2V) and vertical retrace time (V-drive). Each of the TV lines is associated with a horizontal timing cycle consisting of a left margin (B1V), a character display period (HMG), a right margin (B2H) and a horizontal retrace period (B3H).

1.4.6 Memory System

Figure 1-8

The memory system consists of a 1024 character shift register memory, a data port and a memory clock generator. The memory is composed of seven 1024 bit shift registers. Data contained in memory is organised into 12 rows of 80 characters, spare characters being called dummy and sprocket characters. This organisation is given in Figure 1-8.

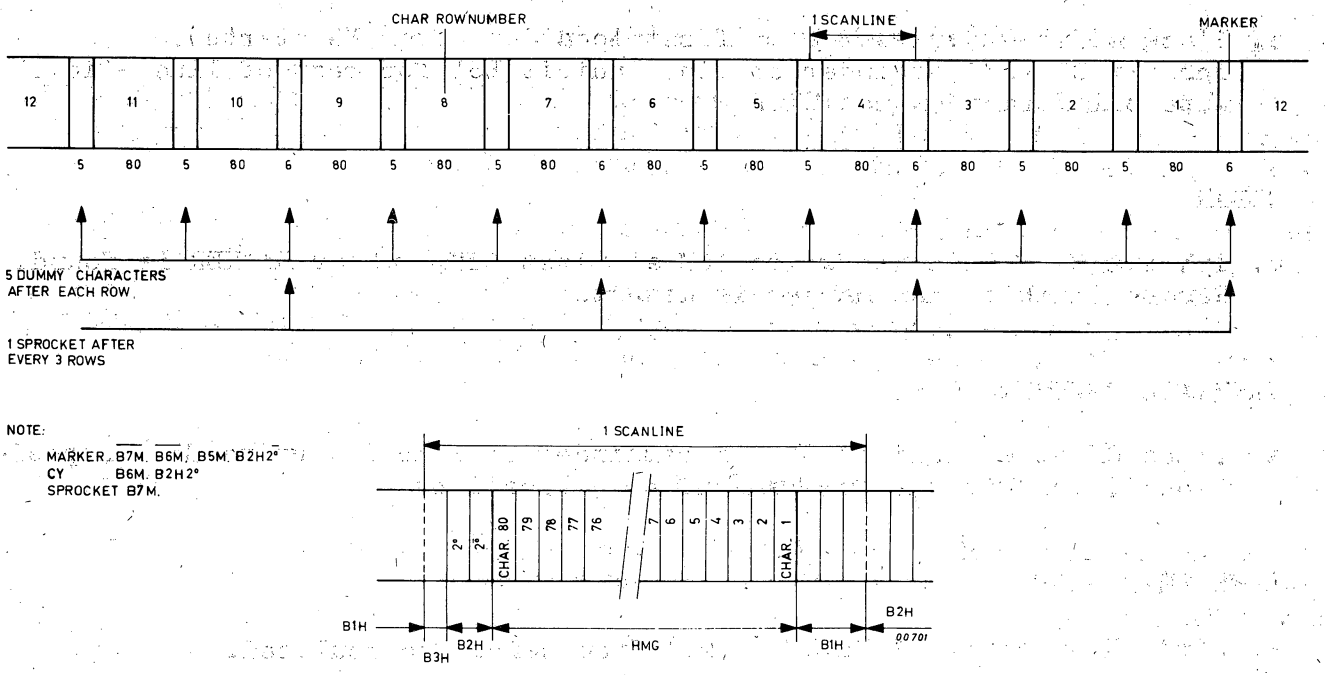

Figure 1-8

The complete memory is recycled once every 12 TV scan lines under control of the memory clock generator, one character being shifted every 644 ns. Memory data is shifting during HMG while dummy characters are shifted during the horizontal margins B1H and B2H. This clock may be inhibited to allow for retrace or memory resynchronisation.

The editing and control of data in memory is controlled by the manipulation of special characters in memory. These special characters are the first data row in memory (MARKER), the cursor row location (CY) and the sprockets. The memory edit and control logic uses these characters to detect data to be edited. Data may be entered or modified at the data port (PORT B).

1.4.7 Memory Edit and Control

The Memory Edit and Control Logic provides control signals to the memory system data port. Procedures are implemented to handle A/N, Backspace, CLEAR, HOME, CR, LF characters as well as ROLL-UP and SET-UP procedures.

The logic consists of program counters (P-counters) and associated gating which are used to control a sequence of fundamental operations required to achieve the function required.

The logic utilises signals developed from the Memory, Synchronizer and I/O and inturn generates the control signals for these same elements.

CLEAR, HOME

a. Find marker ($B5.\ \overline{B6}.\ \overline{B7}.\ B2\overline{H2}^{\circ}$), place CY behind it (write B6 (M) during the next 2BH2°).

b. Inhibit B6 (M) (cursor) during all remaining CY intervals ($B2H2^{\circ}$) until next marker.

c. Place CX at 0 (write B8L in first location after MG starts). Inhibit CX for remainder of line inhibit B8L for rest of line - ie., wipe out former CX position.

CLEAR

a. Inhibit Main data and write B6M at first $B2H2^{\circ}$ after MARKER is found. Remove inhibit when marker is detected.

CARRIAGE RETURN - C/R

a. Place CX at 0. Inhibit CX for remainder or line ie, write B8L in position 1, inhibit B8L for remaining 79 locations.

LINE FEED - LF

a. Find CY. Inhibit CY (INH B6 (M)) from being recirculated.

b. Write CY on next line (next to $B2H2^{\circ}$).

c. If marker appears on next line, perform ROLL-UP (R/U).

ALPHA-NUMERIC ENTRY - A/N

a. Find CY.

b. Find CX. Inhibit CX write (inhibit B8L from being recirculated) unless CX=80.

c. Write I/O data (raise ENTER I/O to MUX for this one character).

d. Write CX in next position, unless CX=80. (Write B8L at next Ø L1).

ROLL-UP (R/U)

a. Skip one count on refresh counter.

b. Inhibit all MAIN DATA from B2H through end of operation.

c. Write MARKER following $B2\overline{H2^{\circ}}$.

d. End of R/U at beginning of MG.

SET-UP

a. Begin at first V-UNBLANK after Power-Turn-On.

b. Inhibit all Main Data (W6M) through end of operation.

c. Perform C/R operations through end of Set-Up operation.

d. Write one sprocket (B7M) during B3H every third tv line through end of operation.

e. Write MARKER (B5M.$\overline{B6M}$.$\overline{B7M}$) and CY (B6M) during B2H.
(MARKER during first half of B2H and cursor Y during second half).

f. End of set-up.

BACKSPACE

a. At next tv line 13, during B3H, add a single 644 ns pulse to ØL2.
(Pulse is inhibited if cursor is already at X=0, ie, B8L=logic "1" during B3H).

1.4.8 Video Refresh Control

This logic controls the supply of successive character rows of data to the VIDEO GENERATION LOGIC. Selection of the next row to be displayed is done by a refresh counter which signals together with the completion of the transfer of data to the generation logic the loading of the row into a temporary Line Buffer (LB1).

Logic is also implemented to perform the ROLL-UP SYNCHRONISATION, VERTICAL RESYNCHRONISATION and CURSOR DISPLAY CONTROL.

1.4.9 Video Generation Logic

Figure 1-9

The process of displaying meaningful characters and symbols on the CRT during video refresh is controlled by this logic.

A TV LINE COUNTER is used to control the transfer of data from LB1 to a similar buffer in the generation logic (LB2). The information within LB2 is used during 9 scan lines to display a complete row of characters on the screen. LB2 is eight bits wide the eigth bit (B8L) being used to mark the cursor character position (CX).
A character from LB2 together with the scan line count is converted to a 5-bit data pattern in the character generator ROM. This dot pattern is added with two SPACE dots and shifted out of a 7-bit VIDEO SHIFT REGISTER to generate serial video for the CRT. This video signal may be modified by the CURSOR DISPLAY LOGIC to form a cursor on the screen.

A typical character format both with and without cursor is shown in Figure 1-9.

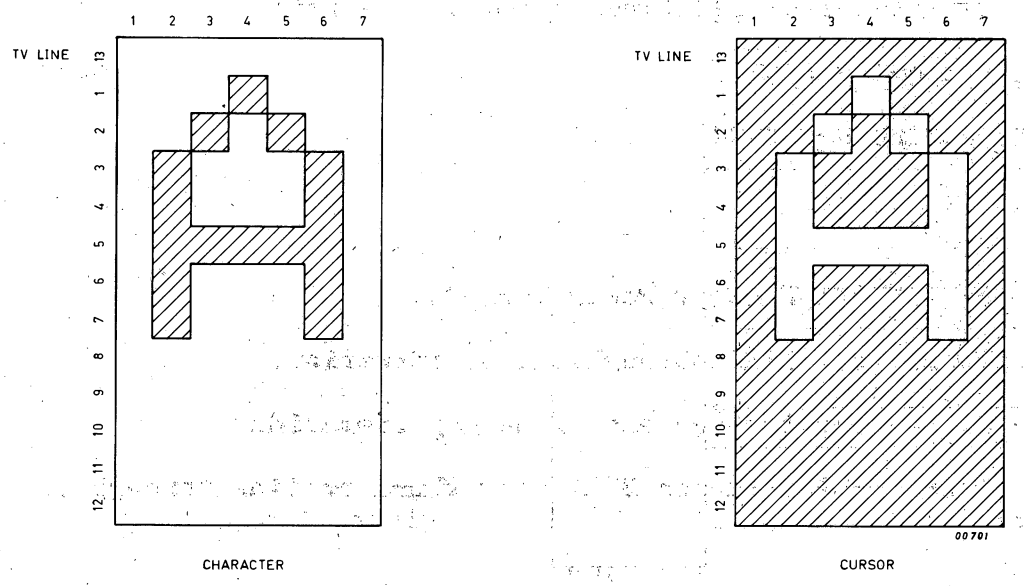

Figure 1-9

1.4.10 Monitor Circuits

The monitor is the display portion of the VDT. It consists of the CRT, horizontal and vertical deflection circuits, a video amplifier, and CRT control circuits.

The CRT is a 12-inch P12 phosphor tube with electrostatic focus which utilises electromagnetic deflection to produce a horizontal raster scan. The beam is deflected by the horizontal and vertical sync input (HDFM, VDFM) while, simultaniously, the serial video data (MON VID) is presented to a video amplifier which modulates the beam intensity.

The horizontal deflection circuit also develops the high voltage for the anode of the CRT, as well as the voltages for the video amplifier, focusing circuit, and CRT.

1.4.11 Power Supply and Distribution

Figure 3.4

This unit supplies all the primary d.c. voltages used by the electronics by a single output connector. The line is fused with a 1A 3AG type line fuse (2 A for 115 Volt) to provide for overload protection. The line powers the transformer via two program boards used to select 230 V or 115 V prime power source and to adjust for low, medium, or high line voltage conditions.

The power transformer has multiple secondary windings to supply the low voltage regulator circuits and dual multitaped primary windings to accomodate the input voltages required. The fan is permanently connected across one 110 V transformer winding such it is always supplied with 110 V.

DC voltages are each derived from a circuit containing a bridge rectifier a regulator, and filtering capacitors.

1.5 EXTERNAL INTERFACE

Figure 1-10

The data interface on the VDT conforms to the EIA and CCITT information interchange standards.

1.5.1 Interface Signals

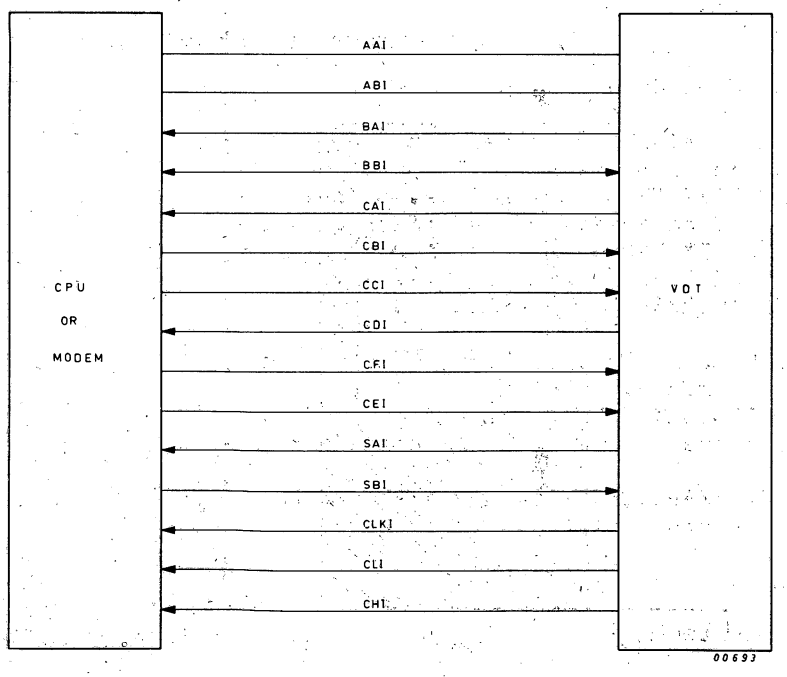

Figure 1-10

1.5.2 Interface Logic Levels

Interface signals are compatible with the EIA Standard RS232C.

a. RECEIVE VOLTAGE — MAX ± 30V
LOGIC '1' = ⩾ 3V
LOGIC '0' = ⩽ 0V

b. TRANSMIT VOLTAGE — ± 7V (CURRENT LIMIT AT 10 MA)
LOGIC '1' = ⩾ +5V
LOGIC '0' = ⩽ -5V

1.5.4 Signal Function (EIA/V-24)

Table 1.3

EIA	V-24	DESCRIPTION
AA	101	PROTECTIVE GROUND OR EARTH (NON FUSED).
AB	102	SIGNAL GROUND / COMMON RETURN FOR ALL INTERFACE LINES.
BA	103	TRANSMITTED DATA.
BB	104	RECEIVED DATA.
CA	105	REQUEST TO SEND. VDT requires to start data transmission.
CB	106	READY FOR SENDING. Modem is in ready condition for transmission.
CC	107	DATA SET READY. Data set is ready to receive data transmission.
CD	108.2	DATA TERMINAL READY.
CF	109	RECEIVED LINE SIGNAL DETECTOR. Detects presense of data on receive line.
CE	125	RING INDICATOR. Indicates that calling signal is being received.
SA		SUPERVISORY TRANSMITTED DATA. Direct connection from auxiliary interface to line.
SB		SUPERVISORY RECEIVED DATA. Direct connection from line to auxiliary interface.
CLK		TRANSMITTER/RECEIVER CLOCK.
CL		CURRENT LOOP. Provides for 20 ma current loop interface.
CH	111 or	DATA SIGNALLING RATE SELECTOR. (Optional) Selects one of the two data signalling rates. ORIGINATE/ANSWER. Determines VDT mode in a multi-point network. (Optional)

Table 1.3

1.5.5 Transmitted/Received Word Structure Figure 1-11

Character format at I/O port:

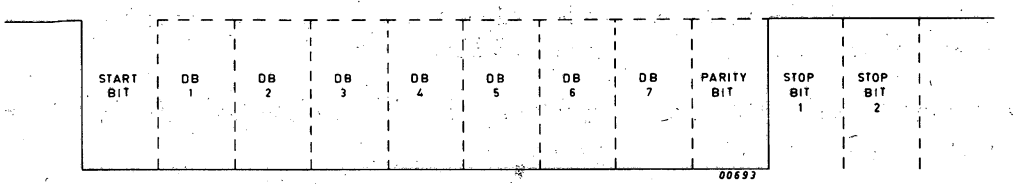

Figure 1-11

Transmission Code for each asynchronously exchanged data character:

1 start bit: indicates that next bit is the first data bit.

7 data bits: according ISO-7 bit code structure (see section 1.2.3)
1 st data bit=least significant bit is transmitted first.
7th data bit=most significant bit is transmitted last.

1 parity bit : for generation and check, adjustable to odd, even, or no parity (none means always "one").

1 or 2 stop bits: signifies end of character.

1.6 OPTIONS

This section introduces the options available on the VDT and gives a brief description of their function.

1.6.1 Baud Rate Selection

Any two of the standard baud rates given in the Technical Data may be selected for use by the VDT. Either of these may be selected by the HI/LO BAUD RATE switch on the keyboard.

1.6.2 Screen Capacity

It is possible to increase the character capacity of the screen from 960 to 1920 characters. This is achieved by having 24 rows of 80 characters as against the standard 12 rows of 80 characters. This option requires that the memory size be doubled for 1024 to 2048 characters by adding additional memory chips. The organisation of data in memory is identical to that of the 12 character row version. The 24 character row version. The 24 character row version has two data entry ports (ØA, ØB) while data is available at four ports (ØA,ØB,ØC,ØD).

To allow the generation of 24 rows of characters in the display area available the hieght of a character is reduced from 13 TV lines to 9 TV lines. This requires that LB2 be loaded with a new row of data every 9 TV lines. Although data in memory now recycles every 24 TV lines each of the data ports is 6 TV lines apart, this fact is used by the refresh logic to make a new row of data available every 6 TV lines by selecting each of the data ports in sequence.

1.6.3 Lower Case Character Displayed

This option allows dual utilisation of the keyboard and display. Either TTY or TPWR formats are available under mode switch control. TTY is normal teletypewriter mode and uses upper case characters only. TPWR position converts keyboard to emulate typewriter utilising upper and lower case characters in conjunction with the SHIFT key.

The implementation requires only the use of an additional ROM in the video generation logic.

1.6.4 Built in Modem (BIM)

For d.c. data communication over distances greater than 15m a modem is required. This is available in a form that may be incorperated in the VDT itself. The option consists of a BIM pcb and associated cabling.

The BIM forms an interface between the VDT and a 2-wire or 4-wire transmission line and is completely transparent ie there is no special requirements for the logics of the VDT.

1.6.5 Auxiliary Interface

Figure 1-12

Provides an additional EIA (V-24) connector to allow the operation of a EIA (V-24) compatable piece of equipment.

This option is factory installed and requires an additional set of EIA drivers in the I/O logic and a cable to the rear panel assembly (25-pole cannon connector).

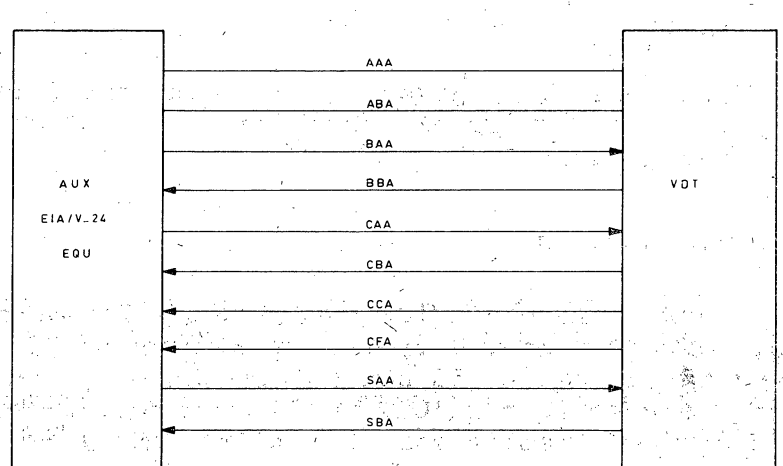

Figure 1-12

The function of the signals is given in subsection 1.5.4.

1.6.6 N-Pad Keyboard

Numeric data may be entered from a numeric keyboard whose V-24 interface cable simply plugs into the VDT auxiliary interface. The keyboard obtains all its supply requirements from the interface.

1.6.7 202C Communications Interface

This consists of a single option board located on the left hand side of the monitor cage. It provides Western Electric 202C data set compatibility with character line turnaround.

1.6.8 Answer Back

Provides a programmable character format up to 16 characters.

1.6.9 Parallel Printer Interface

For use with a Thermal Printer to provide a hard copy output. This option is factory installable and requires a special interface.

1.6.10 Current Loop Interface

Provides a 20ma current loop interface adapter. It is primarily used when the VDT replaces a ASR teletype device.

The electronics of the current loop interface are contained in a single box which plugs onto the Data Set connector. Electrical interface to the remote equipment is by 4 wire line.

The interface signal levels are;

LOGIC '1' = 20ma
LOGIC '0' = 0ma

1.6.11 Keyboard National Variants

The national variants of the keyboard were given in tables 1 and 2 of section 1.2. These may be separated into two types, namely;

a. Special characters. These are implemented in national character generator ROMs (at locations 5-2 and 7-2 of logic board 2) in the VIDEO GENERATION LOGIC.

b. Position of the Q,W,Z,A and Y keys. The position of each key is selected by the position of wire straps on a header (at location 11) mounted on the keyboard pcb.

1.7 FUNCTIONAL DESCRIPTION

The VDT is described functionally in flowchart form showing the generation of primary control signals and data transfers. Measurement points are indicated to allow signal tracing. References to chip and connector locations are described in KEY TO DIAGRAMS section 3.1.

1.7.1 Keyboard

Figure 3.6

The key-matrix depressions are converted to ISO code by the LSI keyboard encoder chip (12). Mode switches are simply brought to the connector J4.

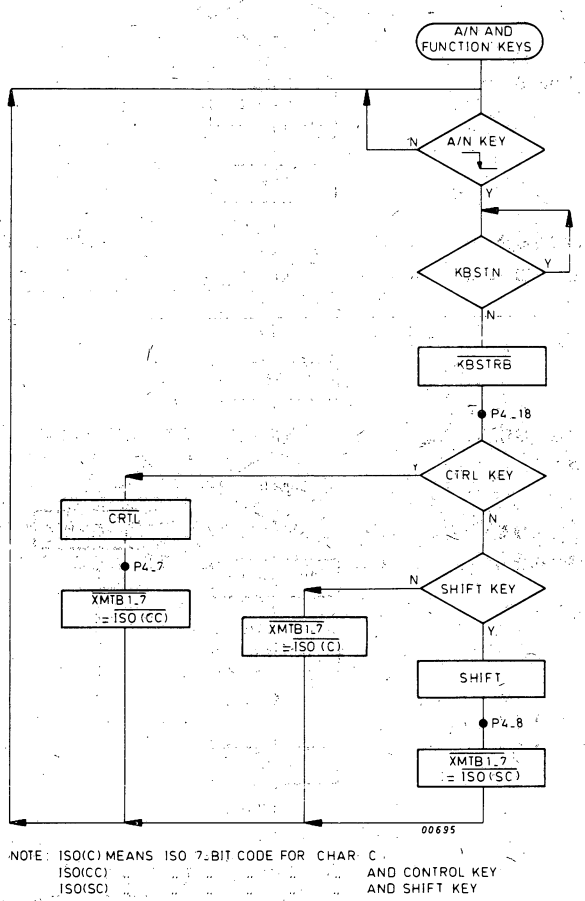

Figure 1-13

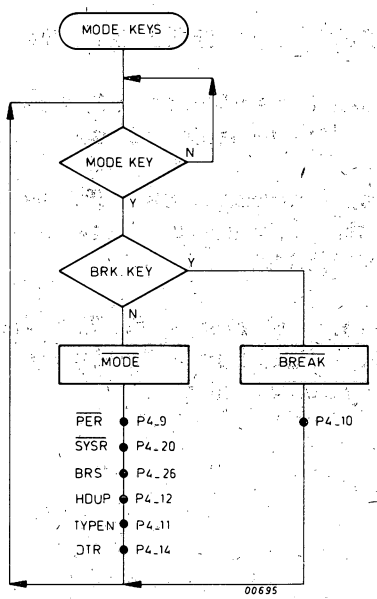

Figure 1-14

Data transmission and reception is controlled by the UART (3-11) at a rate given by the RTCP (9-11-1).

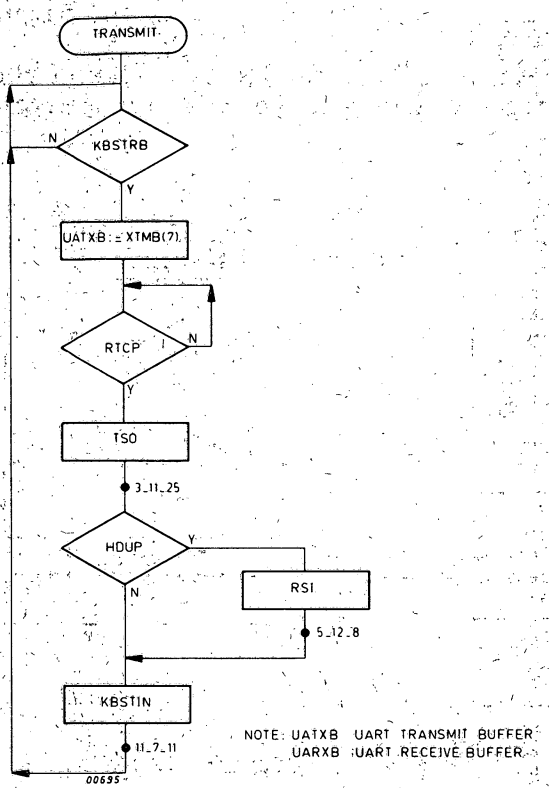

Figure 1-15

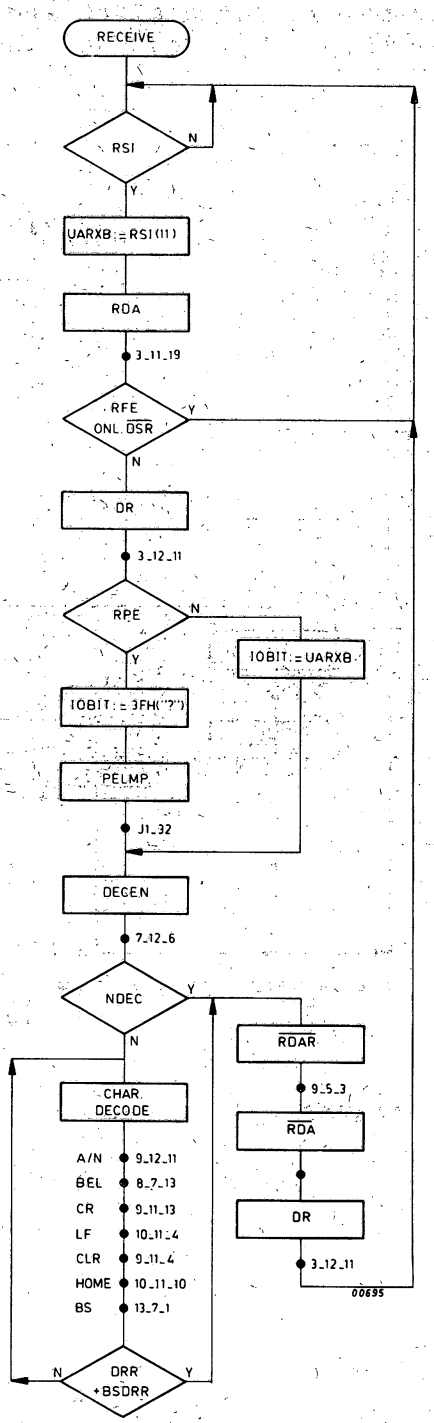

Figure 1-16

1.7.3 T-Pulse Generator and Baud Rate Divider

Figure 3.8.1. & 3.8.5

A27 MHz crystal oscilator is used to produce a 10 MHz master clock which then generates the system timing.

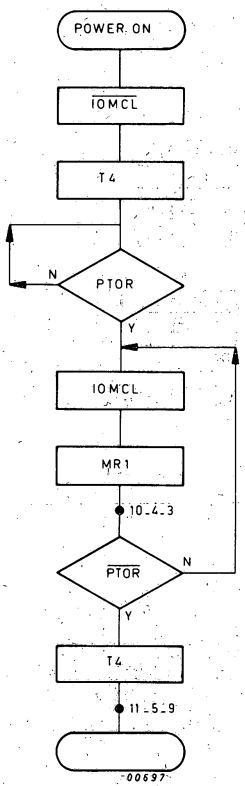

Figure 1-17

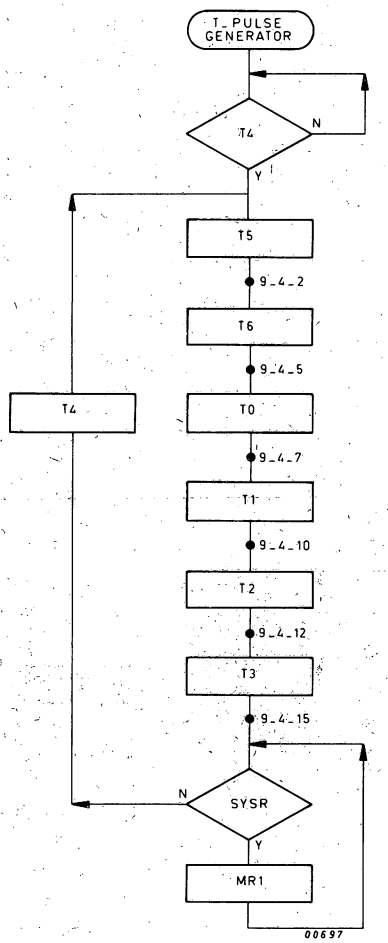

Figure 1-18

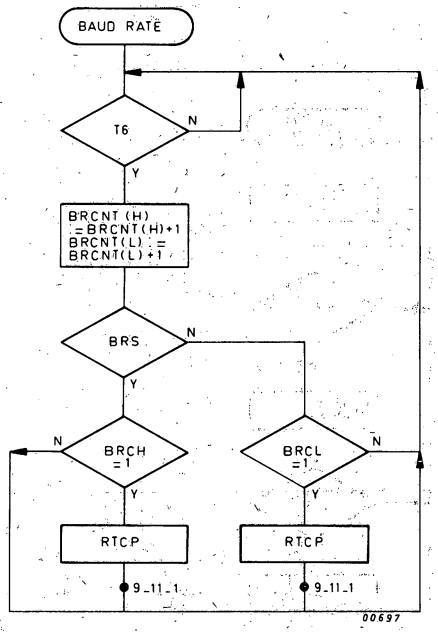

Figure 1-19

The vertical timing periods of figure 1-7 are controlled by a VERTICAL COUNTER (2-2 and 1-3) whose output clocks a cyclic VERTICAL STATE COUNTER (2-1) the outputs of which are decoded to give the required signals.

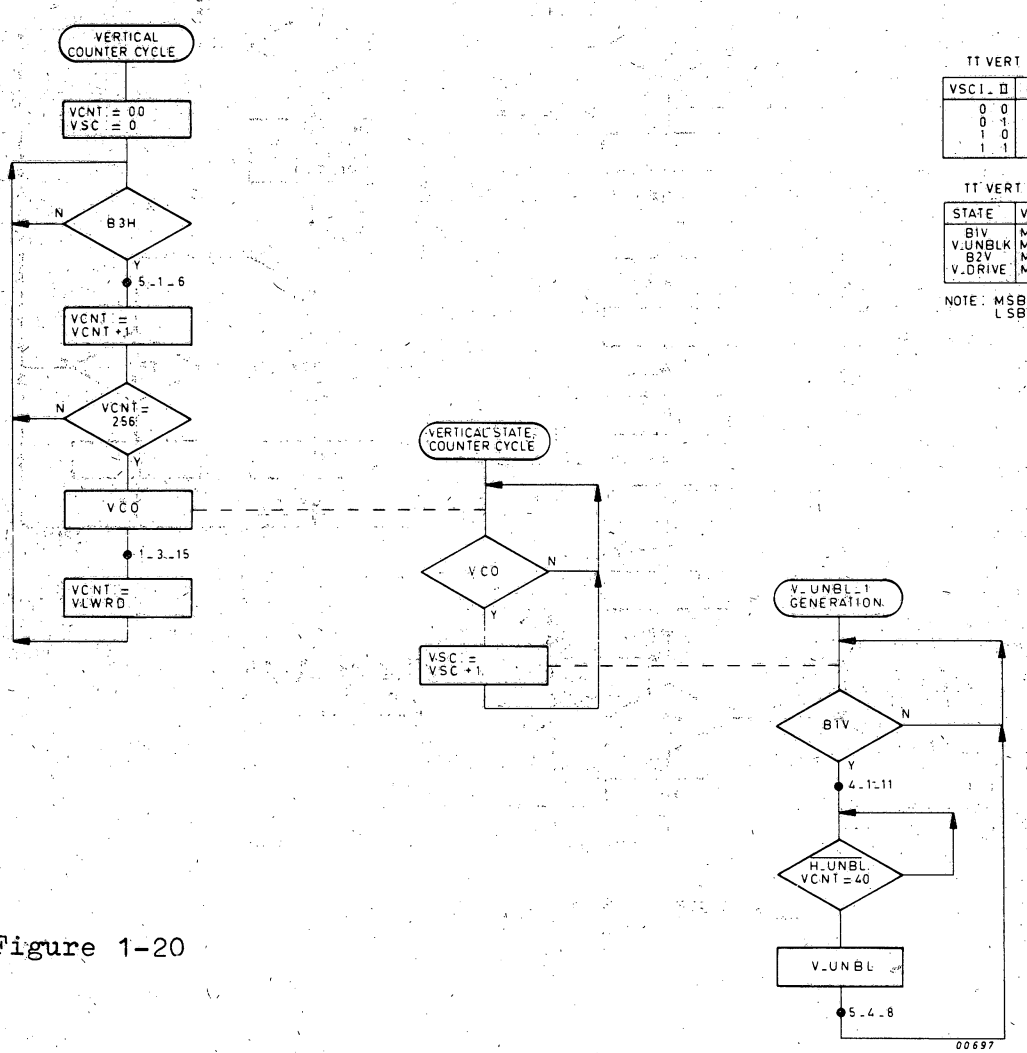

TT VERT STATE COUNTER (VSC)

VSC1_0	FUNCTION	PIN
0 0	B1V	4_1_11
0 1	V_UNBLK	2_3_10
1 0	B2V	4_3_11
1 1	V_DRIVE	1_1_6

TT VERT COUNTER (VCNT)

STATE	VLWRD	COUNT
B1V	MSB13_LSB7	41
V_UNBLK	MSB6_LSB4	156
B2V	MSB9_LSB15	97
V_DRIVE	MSB14_LSB4	18

NOTE: MSB MOST SIGNIFICANT BYTE
LSB LEAST SIGNIFICANT BYTE

Figure 1-20

The horizontal timing periods are produced by a HORIZONTAL COUNTER (5-2 and 3-2) and clocks a HORIZONTAL STATE COUNTER (6-1) whose outputs are decoded to produce the timing signals.

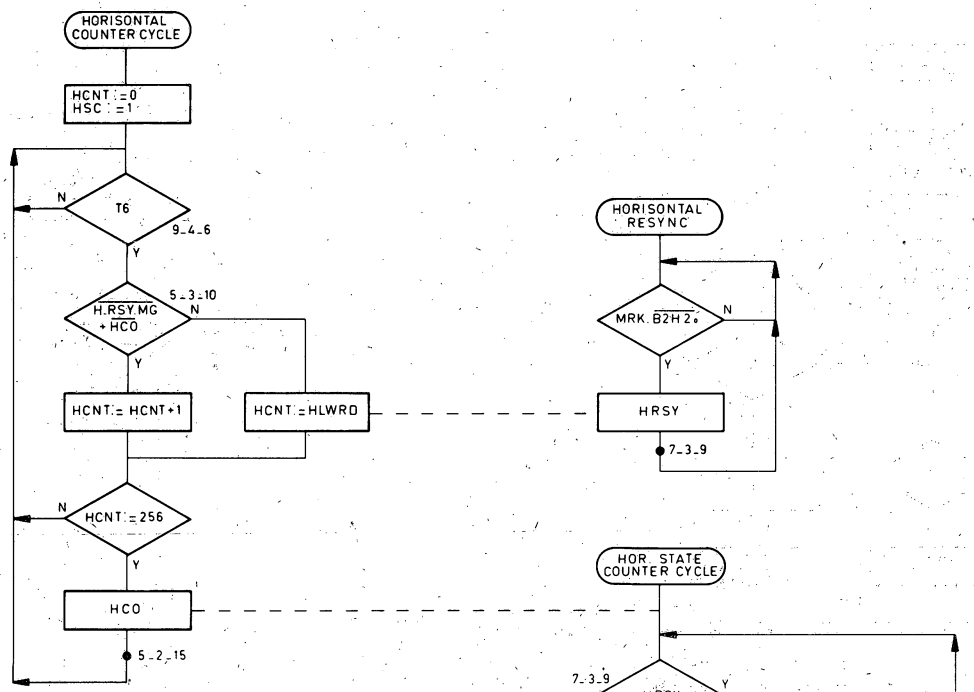

TT HOR STATE COUNTER (HSC)

HSC 0_1	FUNCTION	PIN
0 1	B1H	5_1_3
1 0	H_UNBL	3_1_8
1 1	B2H	4_1_6
0 0	B3H	5_1_6

TT HOR. COUNTER (HCNT)

STATE	HLWRD	CNT
B1H	MSB 15 LSB 13	3
H_UNBLK	" 11 " 0	80
B2H	" 15 " 14	2
B3H	" 15 " 3	13

NOTE: HCWRD IS THE LOAD WORD TO THE HCNT AND IS DERIVED FROM THE DECODED OUTPUT OF THE HSC.

Figure 1-21

The recirculation of data in memory is controlled by the memory clock generator (13-2). Character entry and editing is implemented at data port B (5-3, 2-7, 1-9).

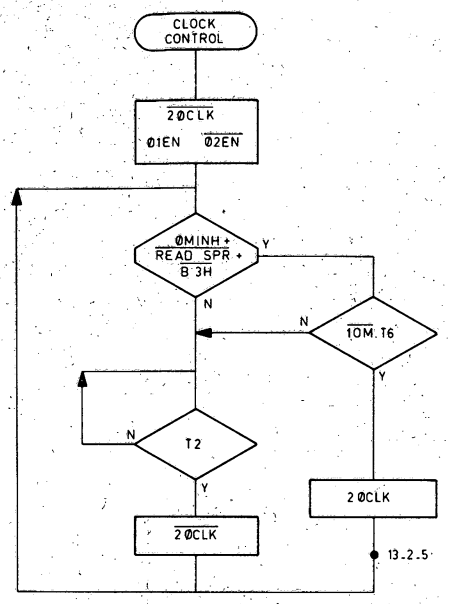

Figure 1-22

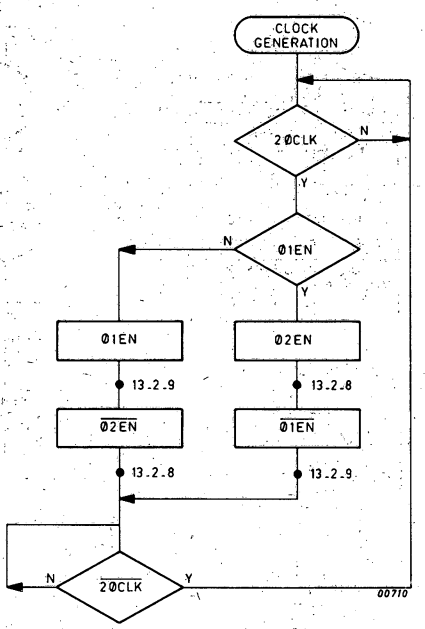

Figure 1-23

Together with the flowchart reference is made to subsection 1.4.7. The letter at the side of the flowchart corresponding to the description in that subsection.

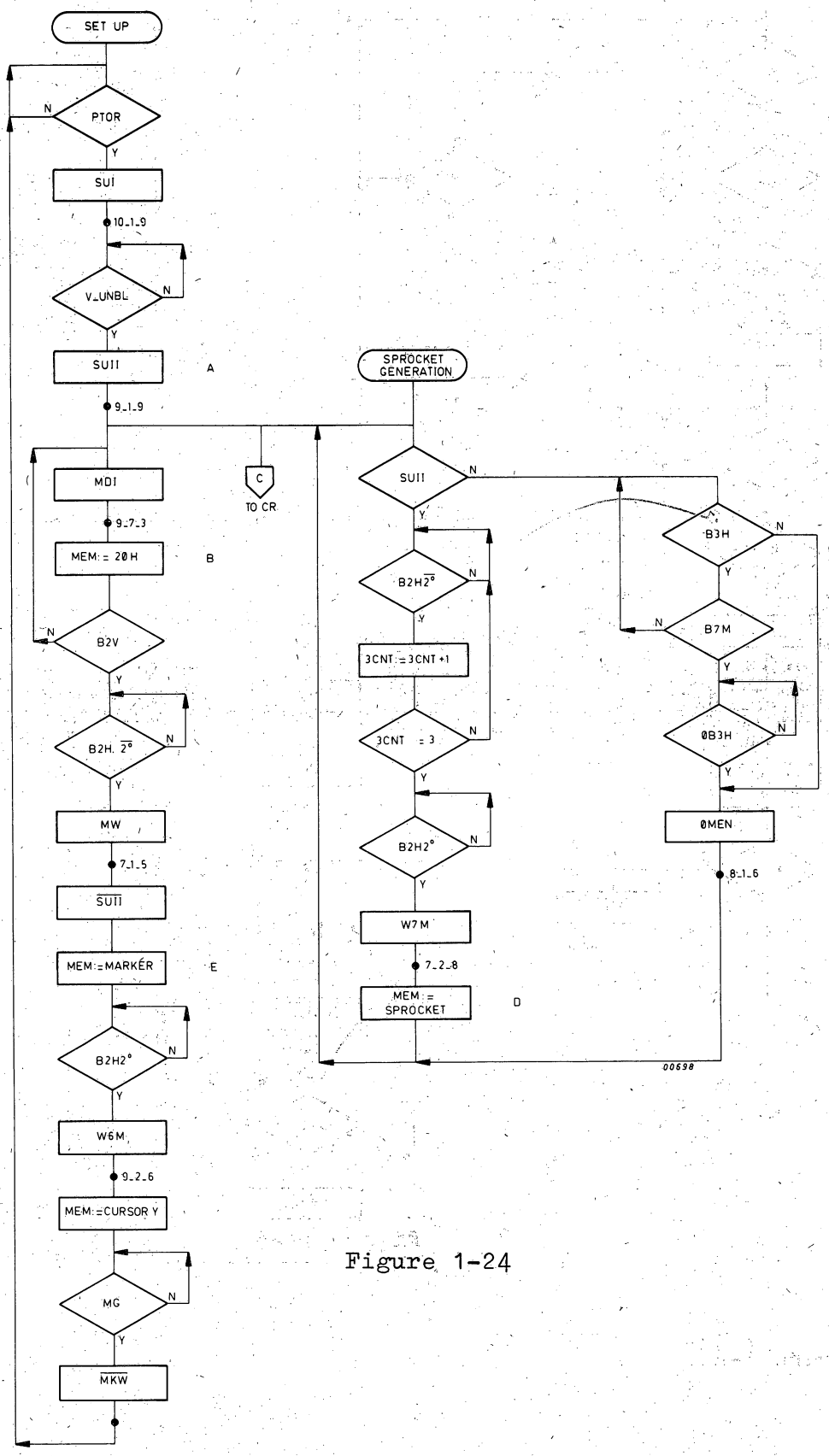

Figure 1-24

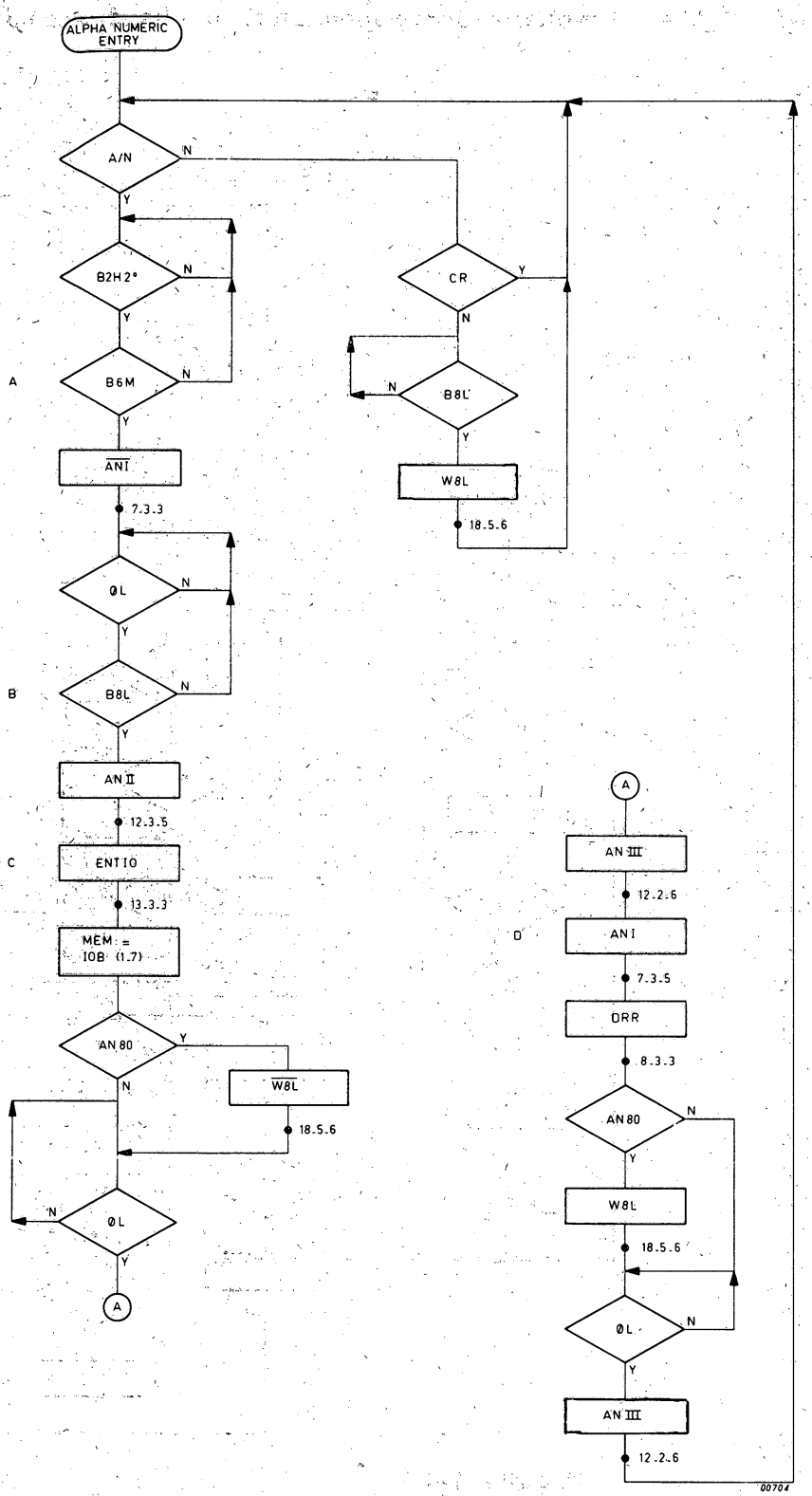
ALPHA NUMERIC ENTRY
A/N
N
Y
B2H2°
N
Y
A
B6M
N
Y
ANI
7.3.3
ØL
N
Y
B
B8L
N
Y
AN II
12.3.5
C
ENTIO
13.3.3
MEM := IOB (1.7)
AN80
Y
N
W8L
18.5.6
N
ØL
Y
A
CR
Y
N
N
B8L
Y
W8L
18.5.6
A
AN III
12.2.6
D
ANI
7.3.5
ORR
8.3.3
AN80
N
Y
W8L
18.5.6
ØL
N
Y
AN III
12.2.6
00704

Figure 1-25

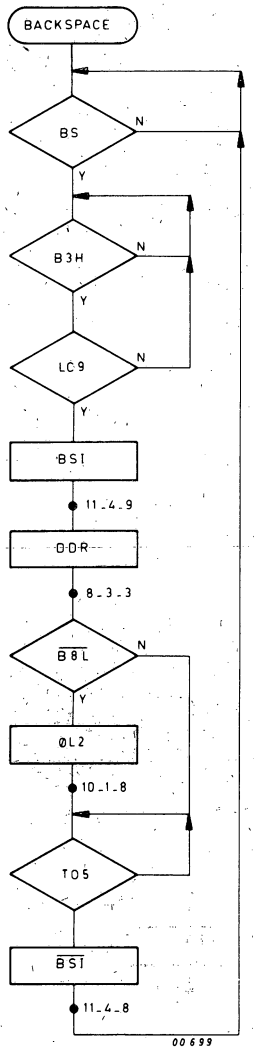

Figure 1-26

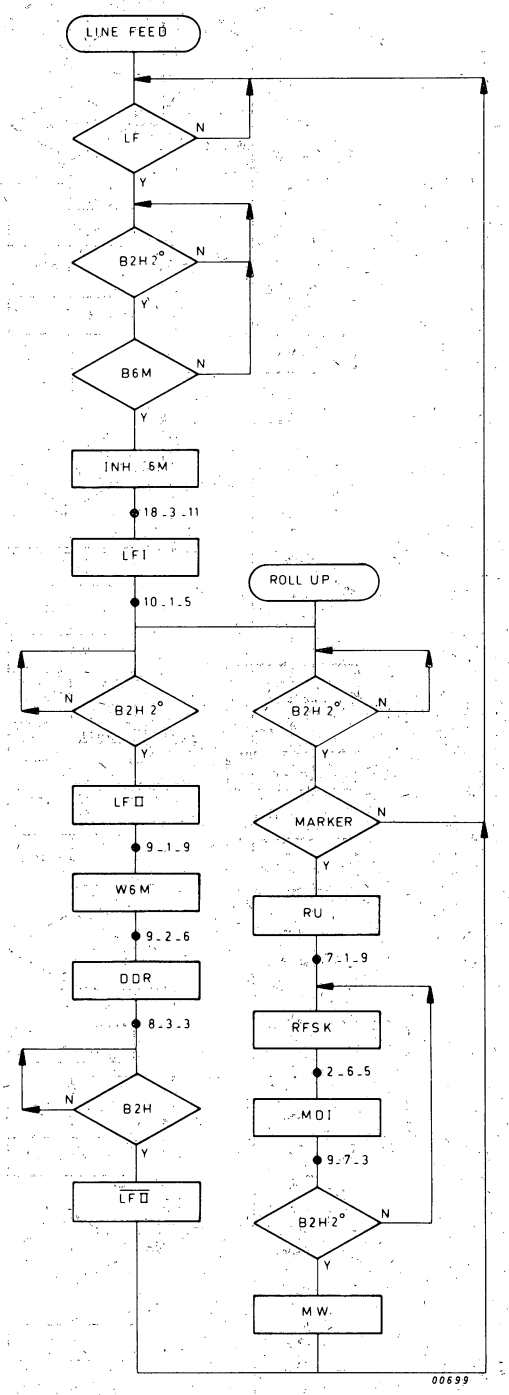

Figure 1-27

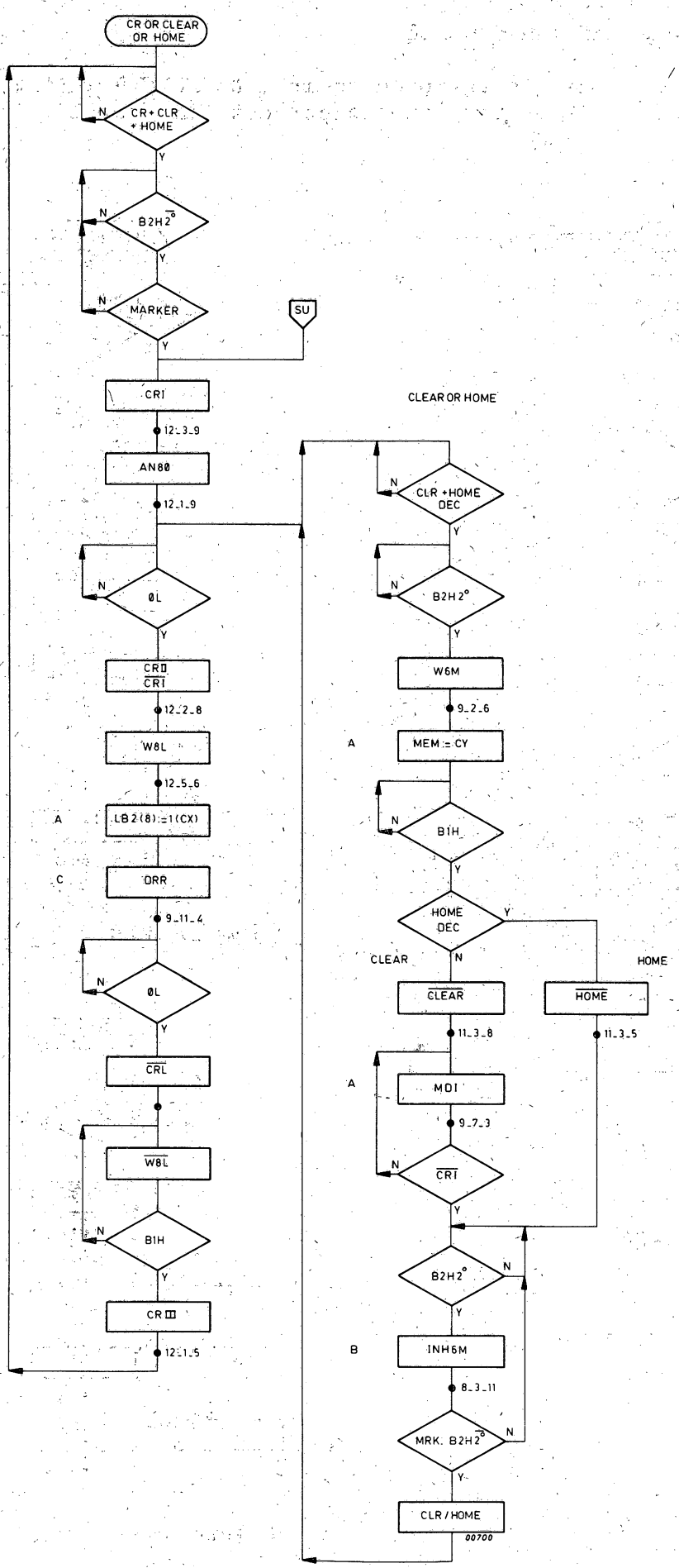
CR OR CLEAR OR HOME
CR+CLR +HOME
N
Y
B2H2°
MARKER
SU
CRĪ
12_3_9
AN8Ø
12_1_9
ØL
CRD
CRĪ
12_2_8
W8L
12_5_6
A
LB2(8):=1(CX)
C
ORR
9_11_4
ØL
CRL
W8L
B1H
CR D
12_1_5
CLEAR OR HOME
CLR +HOME DEC
B2H2°
W6M
9_2_6
A
MEM:=CY
B1H
HOME DEC
CLEAR
HOME
CLEAR
HOME
11_3_8
11_3_5
A
MDI
9_7_3
CRĪ
B2H2°
B
INH6M
8_3_11
MRK. B2H2°
CLR/HOME
00700

Figure 1-28

This controls the storage of data in LINE BUFFER 1 (LB1), (4-5, 4-6) and the transfer of this data at the correct time to LB2, (3-5, 3-6).

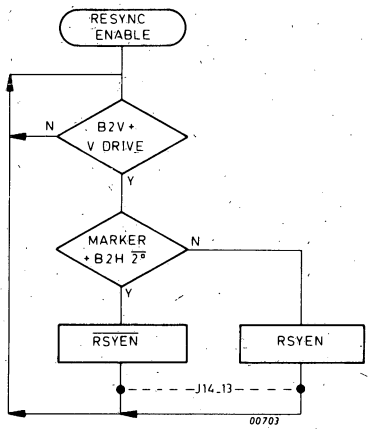

Figure 1-29

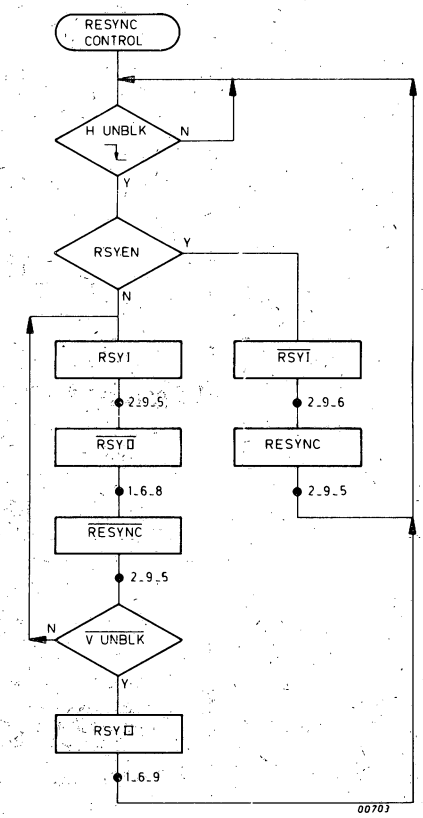

Figure 1-30

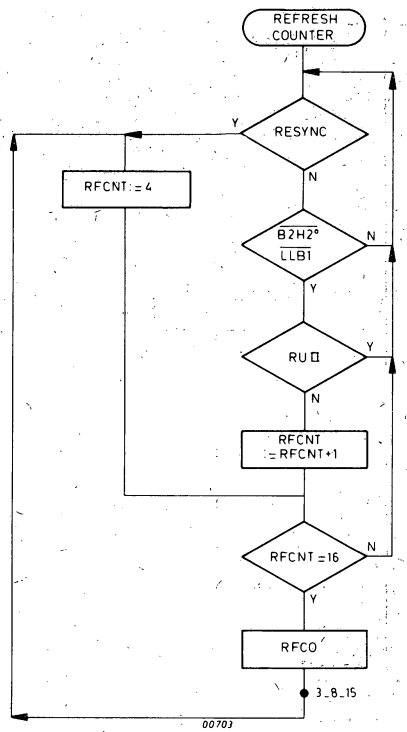

Figure 1-31

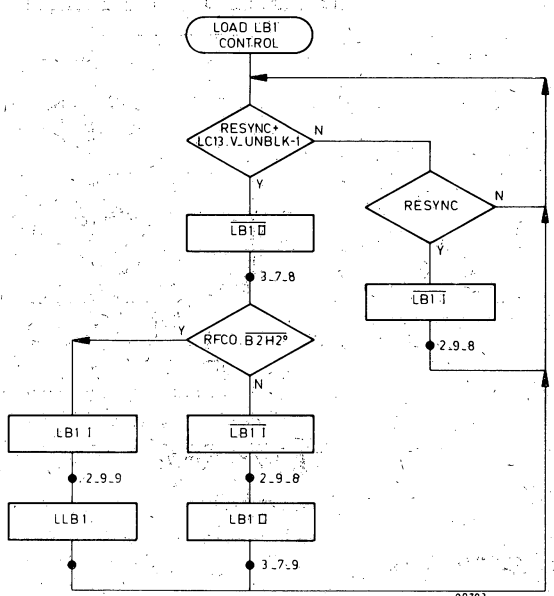

Figure 1-32

A T.V. LINE COUNTER (TLCNT 6-1) controls the loading of the LB2 (3-6, 3-6). This line count together with the character from LB2 form the address to the character generator ROM (5-2).

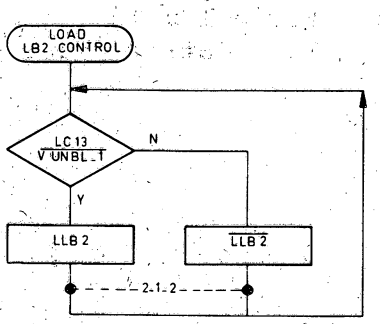

Figure 1-33

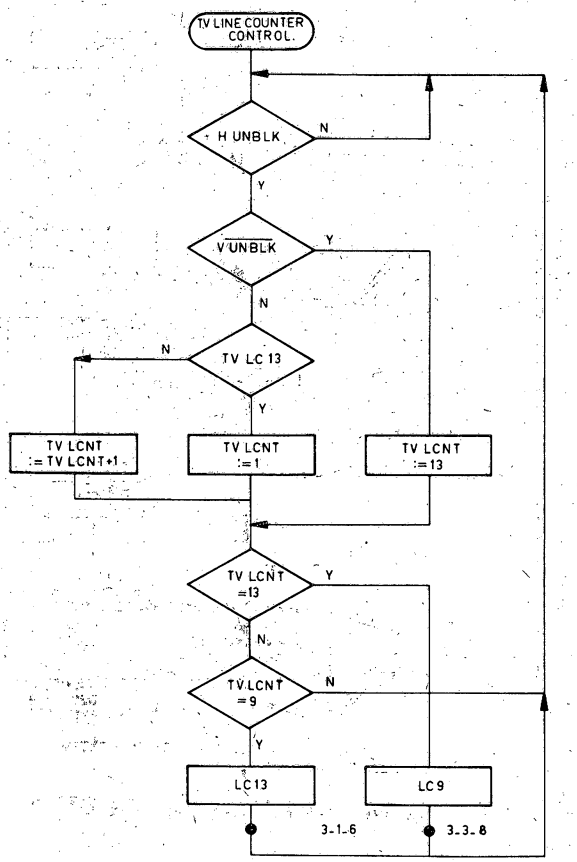

Figure 1-34

1.7.9 Monitor Electronics

Figure 3.12

The video signal from the VIDEO GENERARION LOGIC (MONVID) containing the data and cursor information is amplified and inverted by a single stage amplifier (TS101). This amplified signal modulates the intensity (or number of electrons) of the electron beam from the CRT cathode.

A vertical drive for monitor (VDFM) pulse initialises an electronic circuit which produces in the vertical yoke coil a current waveform causing the vertical deflection of the electron beam.

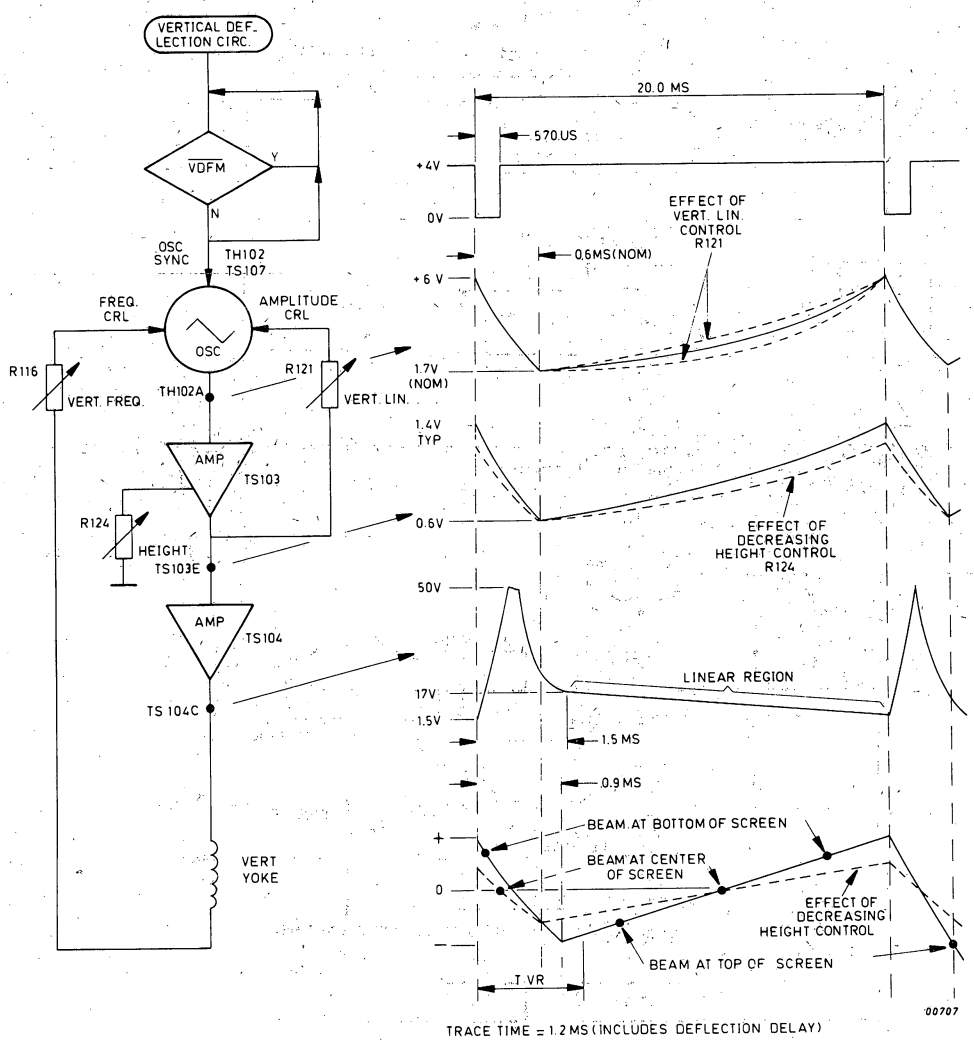

Figure 1-35

The horizontal drive for monitor (HDFM) pulse initiates an electronic circuit which produces in the horizontal yoke coil a current waveform which causes the horizontal deflection of the electron beam.

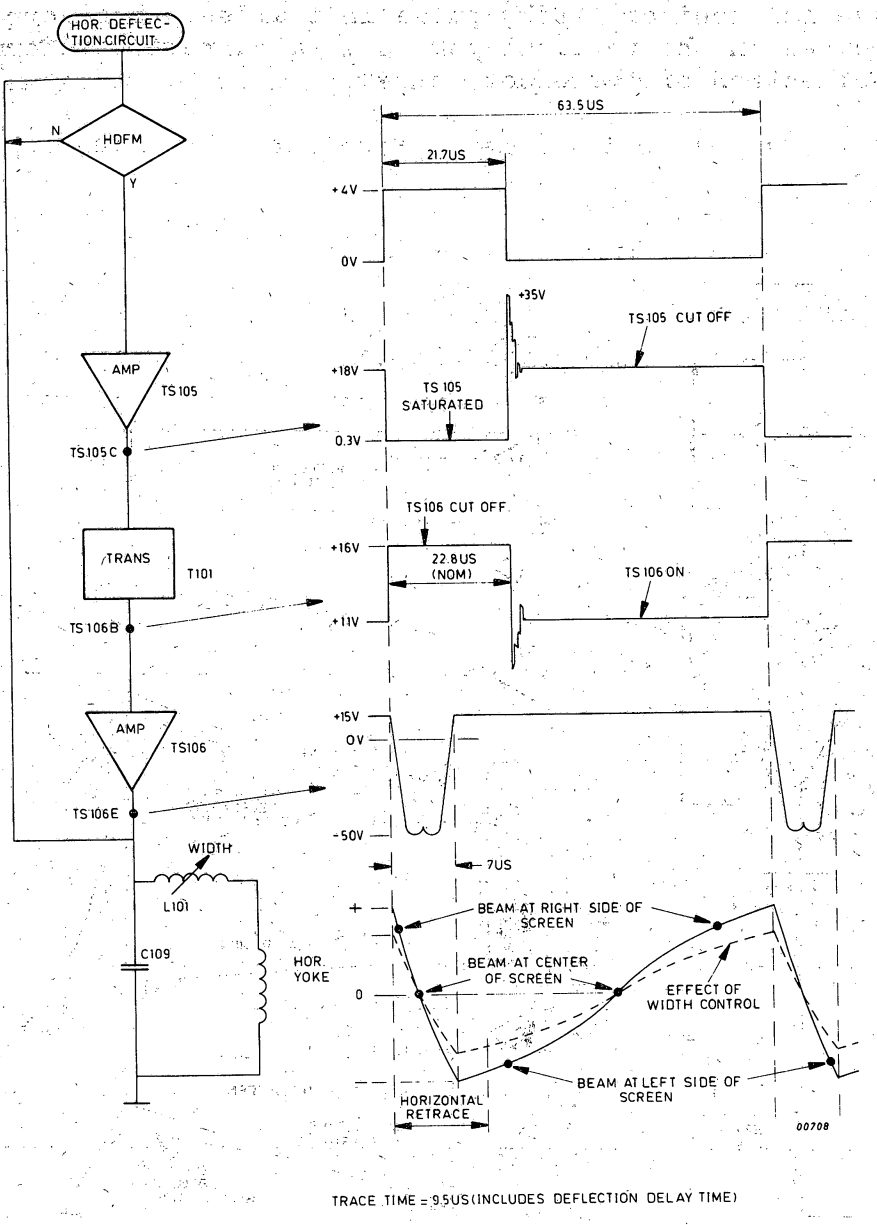

Figure 1-36

1.7.10 Power Supply

Figure 3.14

The +15V regulator circuitry produces both the +15V and +12V dc voltage. The latter being devived from the former by the TS6, CR9 combination. This circuit has overvoltage but not short circuit protection.

A similar circuit produces +5V at 3 ampers with overvoltage and short circuit protection.

The -12V and -5V have no overvoltage or short circuit protection.

The following flowchart gives the general function of the regulator circuits for +5V and +15V.

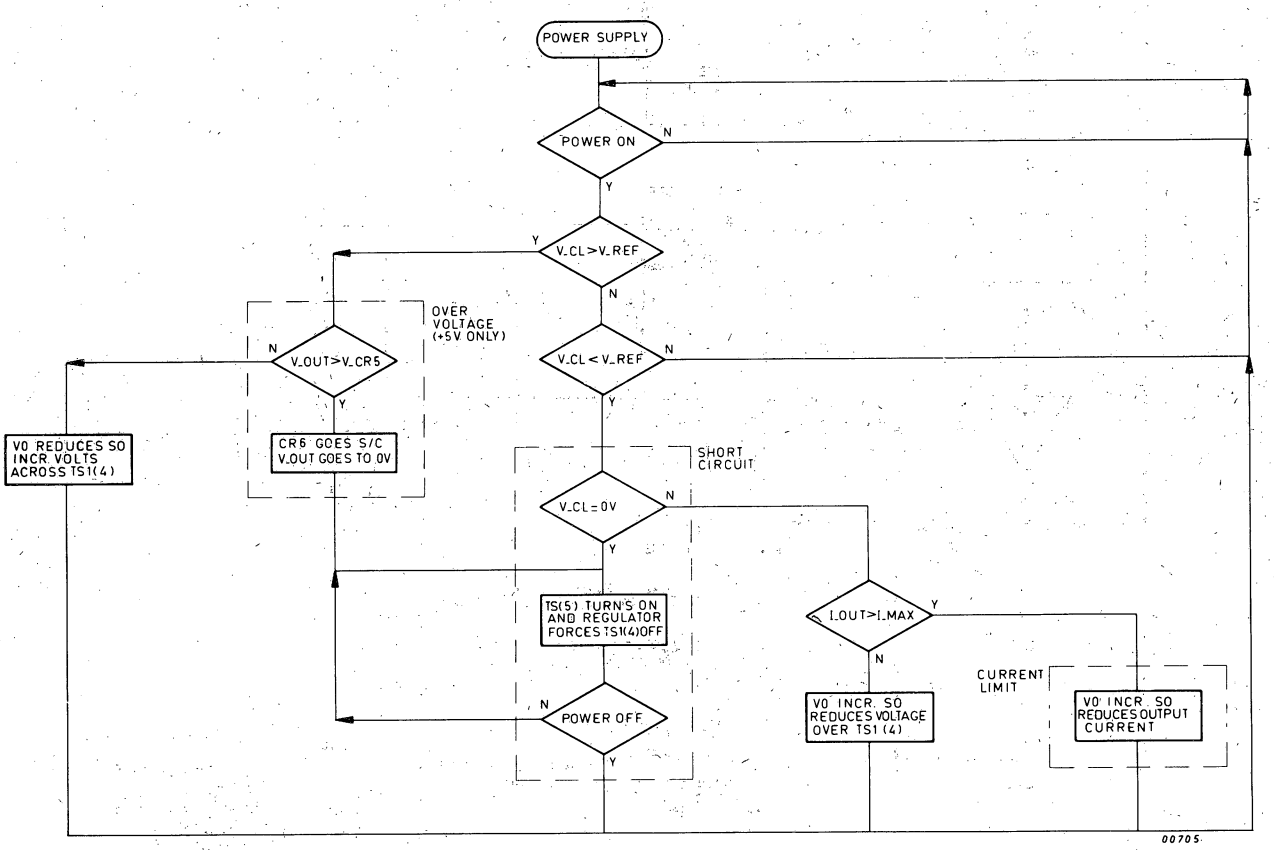

Figure 1-37

Chapter II: Maintenance

2.1 TOOLS

For normal preventive maintenance no special Tools are required. A standard set of Tools will be sufficient.

2.2 MATERIALS

The materials to be used during maintenance are listed below. Where specified use only these materials otherwise damage to the VDT may result.

SCOTTS WIPER
ISOPROPYL ALCOHOL

2.3 PREVENTIVE MAINTENANCE

To ensure proper operation of the VDT it is necessary to clean it periodically. The picture quality should also be checked.

2.3.1 Cleaning

Wipe or brush clean all exposed surfaces paying particular attention to the display faceplate and key tops. For stubborn accumulations a SCOTT WIPER dampened with ISOPROPYL ALCOHOL should be used. Care should be taken not to scratch the faceplate by excess pressure when wiping. Over longer periods the top cover should be removed and the modules cleaned with a vacuum cleaner and dust brush, and CRT screen cleaned carefully with SCOTTS WIPER and ISOPROPYL ALCOHOL.

2.3.2 Picture quality

The picture quality requires to be checked occasionaly so that any degredation may be removed before it becomes unacceptable to the operator.

If this situation arises the picture should be adjusted as per Monitor Board Adjustments subsection 2.8.1.

2.4 SAFETY PROCEDURES

CAUTION: NO WORK SHOULD BE ATTEMPTED ON AN EXPOSED MONITOR BY ANYONE NOT FAMILIAR WITH SERVICING PROCEDURES AND PRECAUTIONS.

The safety procedures, which should be adhered to at all times, are as follows:

a. Never remove a module without first removing the plug from the power source.

b. Before handling the monitor cage assembly always discharge the CRT by shorting the anode connection to the chassis ground. This can be done by unclipping the high-voltage wire from the CRT anode terminal (figure 1-2) and momentarily grounding the terminal.

c. Extreme care should be taken when handling the CRT tube as rough handling may cause it to implode. Do not subject it to undue pressure when handling or nick or scratch the glass. Always wear saftey goggles and heavy gloves for protection when handling the CRT tube.

2.5 TROUBLESHOOTING

Figure 2-1

In this manual the troubleshooting procedures are given in flowchart form which in turn references a set of tables (table 2.1). These together give a logical step by step approach to isolating a fault to one or more replaceable modules.

Each of the following procedures is dependant on the satisfactory completion of the previous procedures in the sequence.

2.5.1 Troubleshooting sequence

a. If the reported symtoms include improper power up indications, the fan is not running, or defective video then start at figure 2.1.1 TURN ON CHECKS.

b. Power on indications are correct as is display video but there is an absence of the cursor or no response to certain typed characters then start with figure 2.1.2 DISPLAY CHECKS.

c. Operation is correct on HALF DUPLEX but errors occur when operated at FULL DUPLEX then commence with figure 2.1.3 FULL DUPLEX CHECK.

d. If typed characters as displayed as "?" or with parity light illuminated but characters displayed as normal then start at figure 2.1.4 PARITY ERROR CHECKS.

e. If depression of the break key does not interrupt a transmission procedure then commence with figure 2.1.5 BREAK CHECK.

f. Operation is correct with LOW BAUD RATE selected but errors occur with HIGH BAUD RATE then start with figure 2.1.6 HIGH BAUD RATE CHECK.

WARNING HIGH VOLTAGES

Extreme care should be taken when troubleshooting in the area of the monitor or power supply due to the high voltages encountered there.

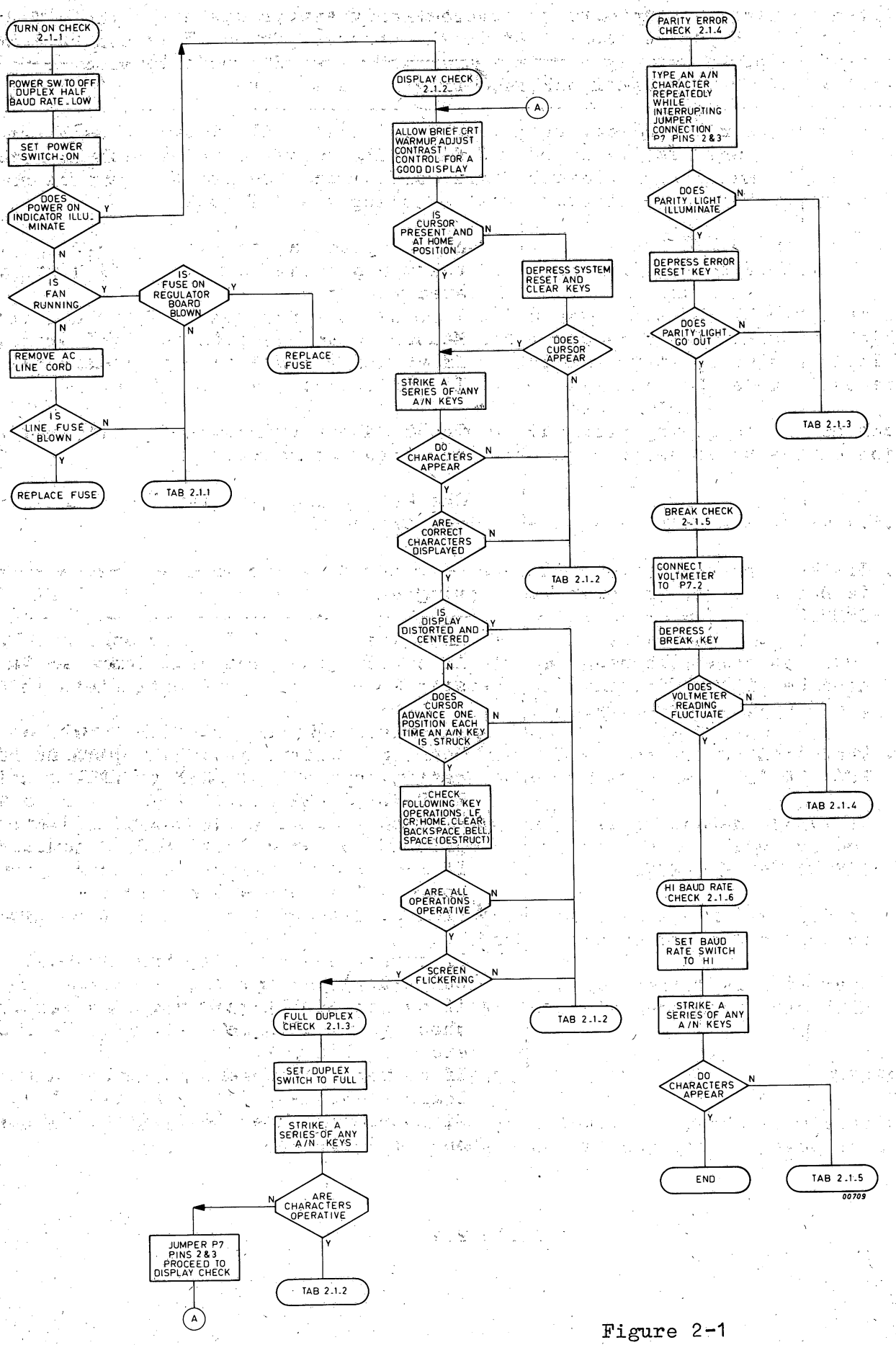
TURN ON CHECK 2-1-1
POWER SW TO OFF DUPLEX HALF BAUD RATE LOW
SET POWER SWITCH ON
DOES POWER ON INDICATOR ILLUMINATE
Y
N
IS FAN RUNNING
Y
N
IS FUSE ON REGULATOR BOARD BLOWN
Y
N
REPLACE FUSE
REMOVE AC LINE CORD
IS LINE FUSE BLOWN
N
Y
REPLACE FUSE
TAB 2.1.1
DISPLAY CHECK 2-1-2
A
ALLOW BRIEF CRT WARMUP ADJUST CONTRAST CONTROL FOR A GOOD DISPLAY
IS CURSOR PRESENT AND AT HOME POSITION
N
Y
DEPRESS SYSTEM RESET AND CLEAR KEYS
DOES CURSOR APPEAR
Y
N
STRIKE A SERIES OF ANY A/N KEYS
DO CHARACTERS APPEAR
N
Y
ARE CORRECT CHARACTERS DISPLAYED
N
Y
TAB 2.1.2
IS DISPLAY DISTORTED AND CENTERED
Y
N
DOES CURSOR ADVANCE ONE POSITION EACH TIME AN A/N KEY IS STRUCK
N
Y
CHECK FOLLOWING KEY OPERATIONS LF, CR, HOME, CLEAR, BACKSPACE, BELL, SPACE (DESTRUCT)
ARE ALL OPERATIONS OPERATIVE
N
Y
SCREEN FLICKERING
Y
N
TAB 2.1.2
FULL DUPLEX CHECK 2-1-3
SET DUPLEX SWITCH TO FULL
STRIKE A SERIES OF ANY A/N KEYS
ARE CHARACTERS OPERATIVE
N
Y
JUMPER P7 PINS 2&3 PROCEED TO DISPLAY CHECK
A
TAB 2.1.2
PARITY ERROR CHECK 2-1-4
TYPE AN A/N CHARACTER REPEATEDLY WHILE INTERRUPTING JUMPER CONNECTION P7 PINS 2&3
DOES PARITY LIGHT ILLUMINATE
N
Y
DEPRESS ERROR RESET KEY
DOES PARITY LIGHT GO OUT
N
Y
TAB 2.1.3
BREAK CHECK 2-1-5
CONNECT VOLTMETER TO P7-2
DEPRESS BREAK KEY
DOES VOLTMETER READING FLUCTUATE
N
Y
TAB 2.1.4
HI BAUD RATE CHECK 2-1-6
SET BAUD RATE SWITCH TO HI
STRIKE A SERIES OF ANY A/N KEYS
DO CHARACTERS APPEAR
N
Y
END
TAB 2.1.5
00709

Figure 2-1

Item	Trouble Sympton	Corrective Action
2.1.1	Turn-On Check Troubleshooting	
1	Power On indicator is OFF, FAN is not running, line fuse is blown.	Remove ac line cord. Replace fuse. If fuse keeps blowing, troubleshoot line cord connections for possible short circuit
2	Same as item 1 exept line fuse is not blown.	Check for presence and/or proper insertion of voltage program board, ON-OFF switch, related wiring.
3	POWER ON indicator OFF, fan is running fuse (F2) on regulator board not blown.	1. Measure 9 to 13 volts dc at P3 pin 8. If voltage is present, proceed to step 3. If not present, proceed to step 2. 2. Troubleshoot transformer, bridge (CR1) and filter circuitry. 3. Check lamp and associated wiring and connectors.
2.1.2	Display Check Troubleshooting	
1	No cursor after turnon. (Depressing SYSTEM RESET and CLEAR doesn't produce cursor).	1. Increase setting of contrast control. If cursor doesn't appear, proceed to step 2. 2. Advance brightness control (R102) on Monitor board to produce a raster. If no raster appears, check for V-DRIVE and H-DRIVE (J1-22 and J1-19). If present, replace Monitor Video board. If not present, troubleshoot TV Synchronizer. If raster appears but no cursor, ground board 1 10-1 pin 9 temporarily- (forced set-up) 3. If cursor now appears, troubleshoot SUI (10-1) on board 1. If cursor still doesn't appear, troubleshoot turn-on logic (9-1, 7-1, 7-2, 6-3, etc.) on board 1. If correct, troubleshoot cursor display logic (1-3, 2-3, 3-1, 3-4, 3-7, 3-5) and Bit 6 memory chips (6-7, 5-10, 6-5, 7-7) on board 2.

Table 2.1

Item	Trouble Sympton	Corrective Action
2.1.2	Display Check Troubleshooting (continued)	
2	Cursor appears, no character entries from keyboard.	1. Replace UART. If characters are still incorrect, check bit and strobe outputs from the keyboard with the ASCII chart. (Technical Data) for the key depressed. If incorrect, replace keyboard. If correct, proceed to step 2. 2. On board 1, check for presence of D/R signal at 5-12 pin 11. If not present replace 5-12 or 10-12 as required. If present troubleshoot A/N chain (7-3, 12-3, 12-2). If correct, replace memory chips (6-7, 5-10, 6-5, 7-7, 5-8, 7-5) on board 2 one at a time.
3	Characters appear but are incorrect.	Replace appropriate memory chips for ASCII bit(s) that fail.
4	Data present, but not synchronized.	1. Depress RESET then CLEAR. If display remains unsynchronized, proceed to step 2. 2. On board 1 ground 10-1 pin 9 temporarily. If synchronization is O.K., troubleshoot power on reset logic (10-7, 10-6). If still unsynchronized, proceed to step 3. 3. Check for Marker decode (board1) on 13-6 pin 8 and sprockets on 6-3 pin 10 at proper timing locations. If present, proceed to step 4. If not present, troubleshoot set-up logic (10-1, 9-1, 7-1) and associated gating. If correct, replace memory chips (6-7, 5-10, 6-5, 7-7, 5-8, and 7-5) on board 2 one at a time. 4. Troubleshoot TV synchronizer logic (3-2, 5-2, 2-2, 1-3) on board 1 and associated gating. If correct, proceed to step 5. 5. Troubleshoot Video Refresh Control logic shown in figure 3-11.

Table 2.1 (continued)

Item	Trouble Sympton	Corrective Action
2.1.2	Display Check Troubleshooting (continued)	
5	Cursor appears as a continuous bar.	1. Replace 3-5 on board, 2. If problem still persists, troubleshoot cursor display logic.
6	Video is excessively distorted, bowed, tilted, or rotated.	1. CRT yoke requires adjustment or replacement. 2. If excessive bowing still persists, replace tv monitor board.
7	Focus, brightness or contrast are unsatisfactory and cannot be corrected with adjustments.	Replace tv monitor board.
8	Characters displayed correctly but screen picture is flickering.	Convert to 60 fields per second refresh rate using adjustment procedure as per subsection 2.1.3.
9	Display is normal exept characters are broken or non-standard.	Replace 5-2, 2-2 or 1-3 on board 2.
10	Cursor doesn't asvance one position whenever an A/N key is struck.	Replace 3-5 on board 2. If cursor still doesn't advance, troubleshoot A/N, P-Ctr. and associated gating.
11	One or all of control functions (HOME, LF, CR, CLEAR, BACKSPACE, BEL) are inoperative.	Troubleshoot respective logic as per troubleshooting procedure.
12	Characters displayed in FULL DUPLEX without P7 jumper.	On board 1 check for ground at 9-12 pin 5. If not grounded, troubleshoot interconnecting wiring. If grounded, replace 9-12.
13	No characters displayed in FULL DUPLEX with P7.	Replace 5-11 or 5-10 or both. If still no displayed characters, replace UART (3-11)

Table 2.1 (continued)

Item	Trouble Sympton	Corrective Action
2.1.3	Parity Error Check Troubleshooting.	
1	Parity Error lamp doesn't illuminate when parity error is received.	1. Check display to see if "?" is displayed. If not, replace UART, 3-11, 12-11, 7-12, 5-12, 4-12, 3-12 as required. If "?" is displayed, proceed to step 2. 2. On board 1, ground 3-8 pin 8. If parity error lamp lights, check for logic "1" at 3-9 pin 11. If present, replace 3-8. If not, replace 4-8.
2	PARITY ERROR lamp goes not out when ERROR RESET key is depressed.	1. On board 1, ground 8-6 pin 4. If PARITY ERROR lamp goes out, replace keyboard. If PARITY ERROR lamp stays lit, replace 8-6 or 4-8, as required. 2. If PARITY ERROR lamp still stays lit, check keyboard to logic board wiring and connectors.
2.1.4	"BRK" Check Troubleshooting	
1	Voltmeter doesn't fluctuate when mointoring transmitted data output and BRK key is depressed.	1. Replace 5-10 on board 1. If still unsatisfactory, check interconnecting wiring and connectors. 2. If problem remains, replace keyboard.
2.1.5	Hi-Baud Rate Check	
1	Baud Rate switch	1. Check Baud Rate select jumpers on 1-5 and 2-6 on board 1. If still no characters present, proceed to step 2. 2. Check for presence of clock at 9-11 pin 1 on board 1. If no clock is present, troubleshoot 9-11, 5-8 and baud rate generator logic.

Table 2.1 (continued)

2.5.2 Troubleshooting arrangement Figure 2-2

The figure shows the modules of the VDT disassembled from the baseplate to allow troubleshooting on the logic boards 1 and 2.

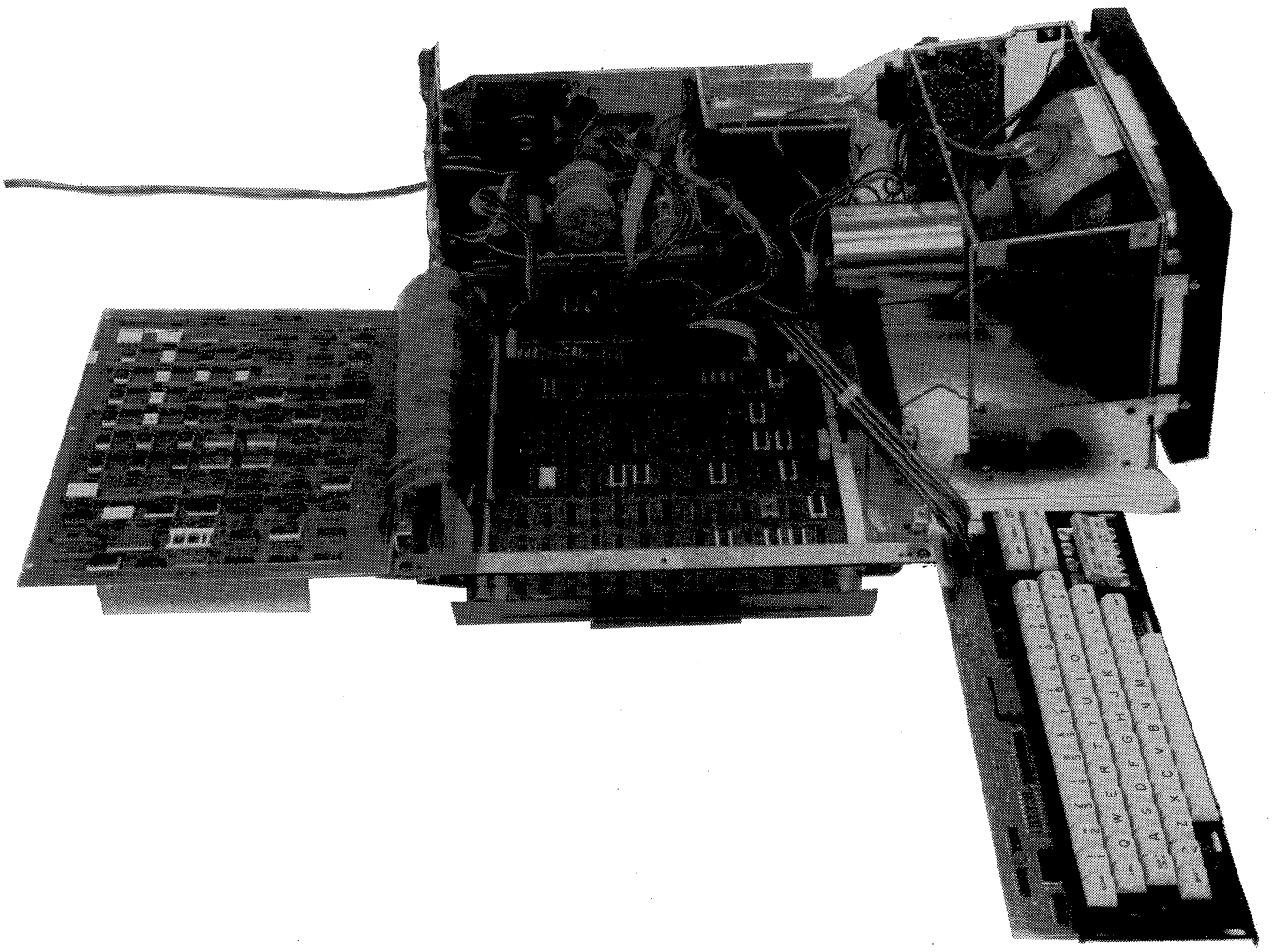

Figure 2-2

The procedure required to achieve this arrangement is as follows.

a. Remove the keyboard as described in section 6 subsection 2 and place it to the right of the baseplate as shown in figure 2-2.

b. Remove the monitor cage assembly as per section 6 subsection 5. Position the monitor cage assembly to the right side of the baseplate and at right angles to it as shown in figure 2-2.

c. Reconnect all connectors.

d. Fold Logic Board 2 to the left and place foam or cardboard under logic board 2 and the flat flex cable to give electrical protection.

e. Reconnect Power Supply.

2.6 REPLACEMENTS

Figure 2-3

Before commencing any replacement procedure, always remove the VDT from its power source by disconnecting the power cable from the socket.

2.6.1 Display unit cover

The cover is attached to the chassis by 4 Dimco fasteners on the right and left sides of the front and rear bottom edges.

a. Slide fasteners to the inside on each side.

b. Carefully lift the cover straight upward high enough to clear the top of the CRT mask and monitor cage.

c. Ensure that the power cable, and modem cable are clear of the chassis and that internal cabling is pushed inward far enough so as not to be caught by the edges of the cover.

d. Remove faceplate by grasping at top and sliding straight up.

e. Raise and centre the cover over the chassis.Special care should be taken of the CRT mask and rear cabling panel.

f. Push the cover firmly down and engage the fasteners by sliding outwards.

g. Position faceplate in guide rails and slowly slide downward until firmly seated.

2.6.2 KEYBOARD

The keyboard is located at the front of the terminal and is mounted via four screws to brackets connected to the baseplate.

a. Unplug the connector J4 (Pos 1) by pulling gently up and away from the keyboard.

b. Remove the four mounting screws (Pos 2) and lift the keyboard out of the terminal.

c. Place the assembly on the brackets, then insert and tighten the screws. The keyboard should be adjusted to fit easily through the cover.

d. Reconnect the keyboard cable.

2.6.3 Power supply

The power supply is a completely selfcontained assembly. All the component parts are attached to a single mounting plate which is fixed to the baseplate by four screws.

a. Unplug connector cable P3 (Pos 4) by lifting vertically upwards.

b. Remove the clear plastic plate from the top of the power transformer (Pos 5) by unscrewing the two screws and lifting vertically away.

c. Unplug cable plug P12 by gripping plug and socket and pulling apart.

d. Replace plastic plate and tighten screws.

e. Remove the rear panel assembly (Pos 6) which is mounted to the power supply rear panel at each corner by a nut and screw.

f. Remove the power supply lifting away from the baseplate after loosening the four screws located at each corner of the assembly (Pos 7).

g. Replace power supply and tighten screws.

h. Replace the rear panel assembly by the four screws and tighten nuts.

i. Remove plastic plate and reconnect plug P12, then replace plate.

j. Plug in cable P3.

2.6.4 Logic board assembly

The logic board assembly is mounted under the monitor and keyboard assemblies by means of two slotted channels running the length of the baseplate on the left and right sides.

a. Remove the two connectors going to Logic Board 1 by unscrewing the jack screws on either side of both connectors and lifting the connectors straight up from the Logic Board.

b. Remove the screw and nut (Pos 3) securing the grab plate and earthing springs. Pull out the assembly by the black grab plate (Pos 8) with a constant even pressure ensure that the Dimco fasters don't interfere with the assembly.

c. Insert the edges of Logic Board 1 into the slotted channels. Carefully push the assembly all the way back until the grab plate is flush with the outer base plate edge.

d. Carefully insert connectors P1 and P2 into board connectors J1 and J2 and then tighten jack screws.

2.6.5 Monitor cage

All the monitor electronics are connected to the cage which may be removed fairly easily from the baseplate.

a. Ensure that the power source is disconnected.

b. Remove the edge connector P6 (Pos 9) from the monitor board.

c. Remove the four mounting nuts (Pos 10).

d. Carefully grasp the bottom portion of the cage at the left and right sides, lifting up and slightly outward so as to clear the power supply.

Do not place the cage on any surface with CRT face down

e. Reinstall the monitor cage by carefully lowering it over the baseplate and aligning the two slots on each side of the cage with the studs on the baseplate,attatch nuts to each of the 4 studs and tighten.

f. Install the edge connector to the monitor board.

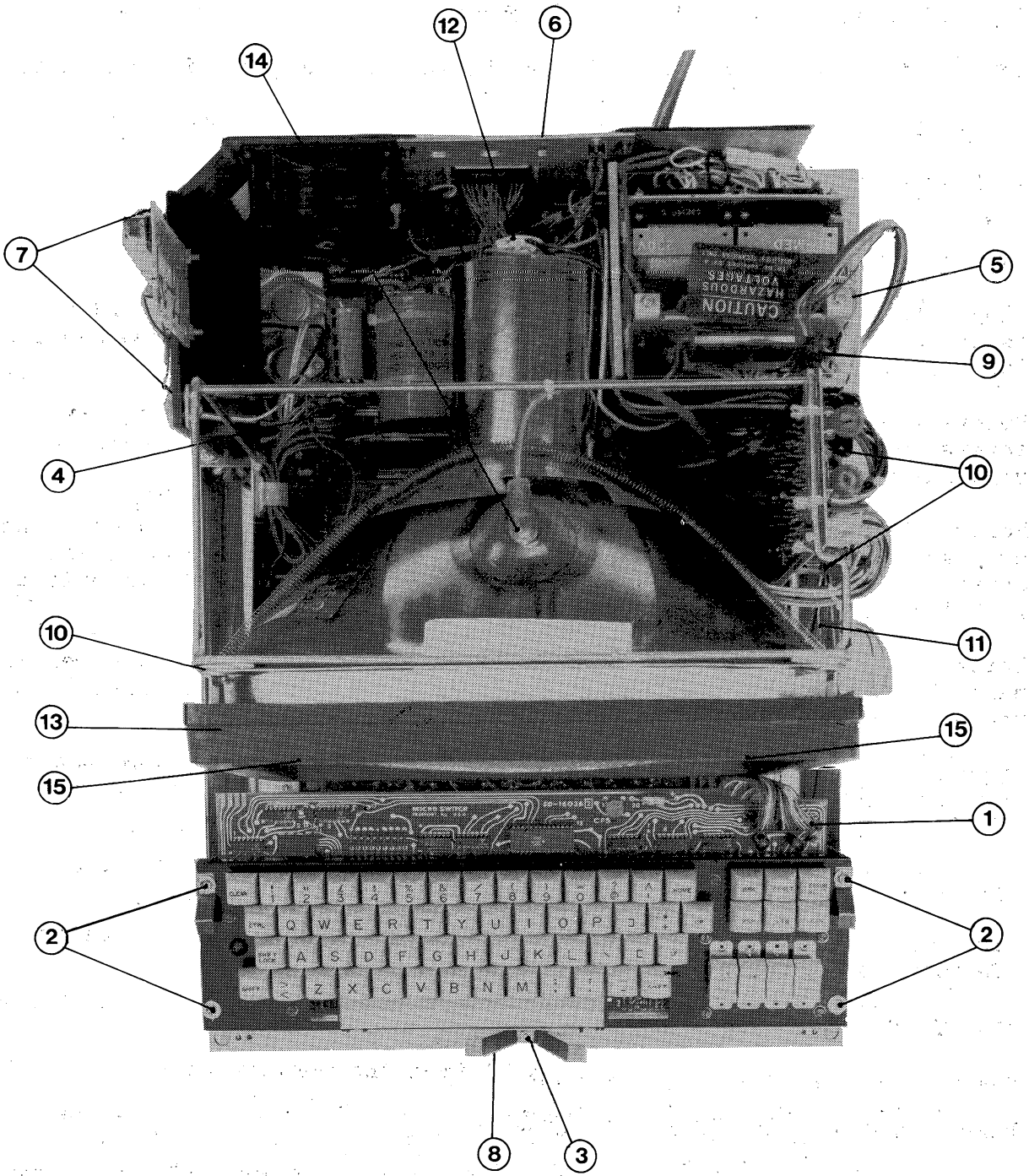

Figure 2-3

2.6.6 Monitor control board Figure 2-4

The monitor control board is located on the top righthand side of the monitor cage (Pos 11).

a. Disconnect 10 pin edge connector and all plugs on the board. Record the position of each plug.

b. If the board is secured by plastic straps these should be cut away.

c. Lift one side then the other away from the cage, to unclip the board.

d. Remove the CRT connector.

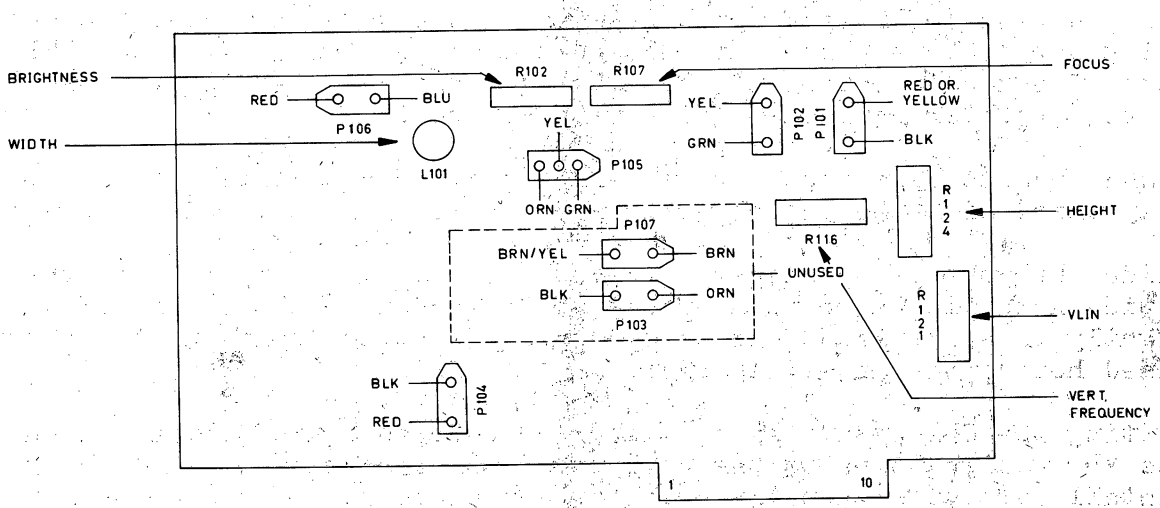

Figure 2-4

e. Place the p.c.b. over the right side of the cage with the connector edge facing the rear. Press down until the clips snap home. Connect the CRT connector.

f. Connect all plugs, as per the above wiring diagram, and the edge connector.

2.6.7 CRT

The CRT is mounted in the monitor cage assembly and great care should be taken when attempting this replacement.

a. Remove the keyboard as per subsection 2.6.2.
Ensure that enough space is available in front of the VDT for the CRT to be placed there. Disconnect the CRT connector (Pos 12) from the rear of the CRT tube, and the two sets of yoke plugs from the monitor p.c.b. (P102, P106). Loosen these yoke wires from the CRT.

b. Remove the four screws which retain the CRT mask (Pos 13), pull the mask straight off, place the mask face down in front of the VDT to act as a cradle for the CRT when it is removed.

c. Unclip the high-voltage wire from the CRT anode terminal (Pos 14) and momentarily bring a wire from ground to the terminal.

d. Unhook the two mu-metal shield tension springs. (Note how they are connected to the cage).

e. Remove the four screws at the corners of the CRT face flange (Pos 15) while holding the weight of the CRT by the bottom of the face flange.

f. Handling the CRT only by its face flange and bell, carefully, withdraw it from the display unit. Straight outwards until the neck of the CRT is clear of the shield and then downwards until the bottom edge of the flange rests on the mask. Stand the CRT face down in the mask.

g. Remove the mu-metal screen.

h. The position of the yoke with respect to the CRT bell should be carefully noted for replacement. Loosen the deflection yoke of the CRT. Note the exact position of the metalised sleive under the yoke which is required for horisontal linearity control.

i. Stand the CRT face down in the mask immediately in front of the display unit, with the anode terminal facing away from the display unit.

j. Slide the yoke on the neck of the CRT down against the bell to the position noted in the removal procedure. Tighten the locating screw lightly to allow manual rotation. Check also the position of the metallised horisontal linearity sleeve.

k. Lifting the CRT by its face flange and bell and carefully position in the VDT. Align holes at the corners of the face flange and loosely install (at two diagonally opposite corners) two of the screws retained during removal.

l. Reconnect the socket to the rear of the CRT tube and the plugs P102 and P106 to the bottom of the monitor control board (figure 2.4).

m. Clip the high-voltage wire into the anode terminal and connect the CRT connector.

n. At this stage the CRT picture should be aligned using the adjustment procedure of subsection 2.7.2.

o. Remove the h.v. wire from the anode connector and ground this connector.

p. Remove the CRT from the cage as per steps e and f having previously removed the yoke wires.

q. Guide the yoke wires through the screen towards the rear. Place the mu-metal screen on top of the power supply assembly with the foam padding positioned to contact the top, bottom, left and right surfaces of the CRT bell.

r. Lift the CRT by its face flange, align the neck and socket to enter the shield an locate the CRT into position. Align the face with the holes and secure with the four screws.

s. Clip in the wire to the anode connector. Secure the shield by the tension springs and install the yoke plugs into the monitor p.c.b.

t. Reinstall the CRT mask and secure by the four screws.

2.7. ADJUSTMENTS

The only adjustments required on the VDT are those for the TV display. These consist normally of the Monitor Control Board adjustments which control the picture quality however when the CRT is replaced the monitor must be realigned. Similary if flickering of the picture occurs the VDT requires to be converted to a 60 fields per second refresh rate.

2.7.1 Monitor control board adjustments figure 2-4

These adjustments control display focus and brightness, display sync. vertical frequency and vertical linearity. All the adjustment points are located on the Monitor Control Board situated to the right of the CRT.

a. Turn on the terminal and allow three minutes for warm up.

b. Strike the CLEAR key to clear the display and home the cursor.

c. Enter several lines of data at the top and bottom of the screen.

d. Set the CONTRAST control on the left lower front of the VDT to a mid-range setting. Then adjust the BRIGHTNESS potentiometer R102 for best character contrast, such that the raster is just extinguished and there is good contrast without noticable character blooming.

e. Adjust FOCUS control R107 for best overall focus of video data for the area between the centre and upper left of the display.

f. Adjust WIDTH control L101 for a display width of 9 inches (22.8 cm).

g. Adjust HEIGHT control R124 for a display hight of 61/4 inches (15.8 cm).

h. Adjust VLIN control R121 for best vertical linearily.

i. Connect a test jumper wire from P6-9 ($\overline{\text{VDFM}}$) to P6-1 (GROUND).

j. Adjust VERTICAL FREQUENCY control R116 until picture rolls up slowly.

k. Disconnect jumper (P6-9). The raster should be locked without any rolling effect. Repeat steps a and b, then if necessary readjust.

2.7.2 Monitor alignment Figure 2-5

This adjustment is normally only required when the CRT is replaced and is used in conjunction with the replacement procedure given in subsection 2.6.7.

a. The replacement procedure should be followed to step 2.6.7.n. At this point the keyboard and a.c. line should be plugged in, the mode switches set to HALF DUPLEX and OFF LINE, and the power switch set to ON.

b. Allow the CRT to warm up for a minute and then fill the screen with the character "H" and check the tilt and centering of the display.

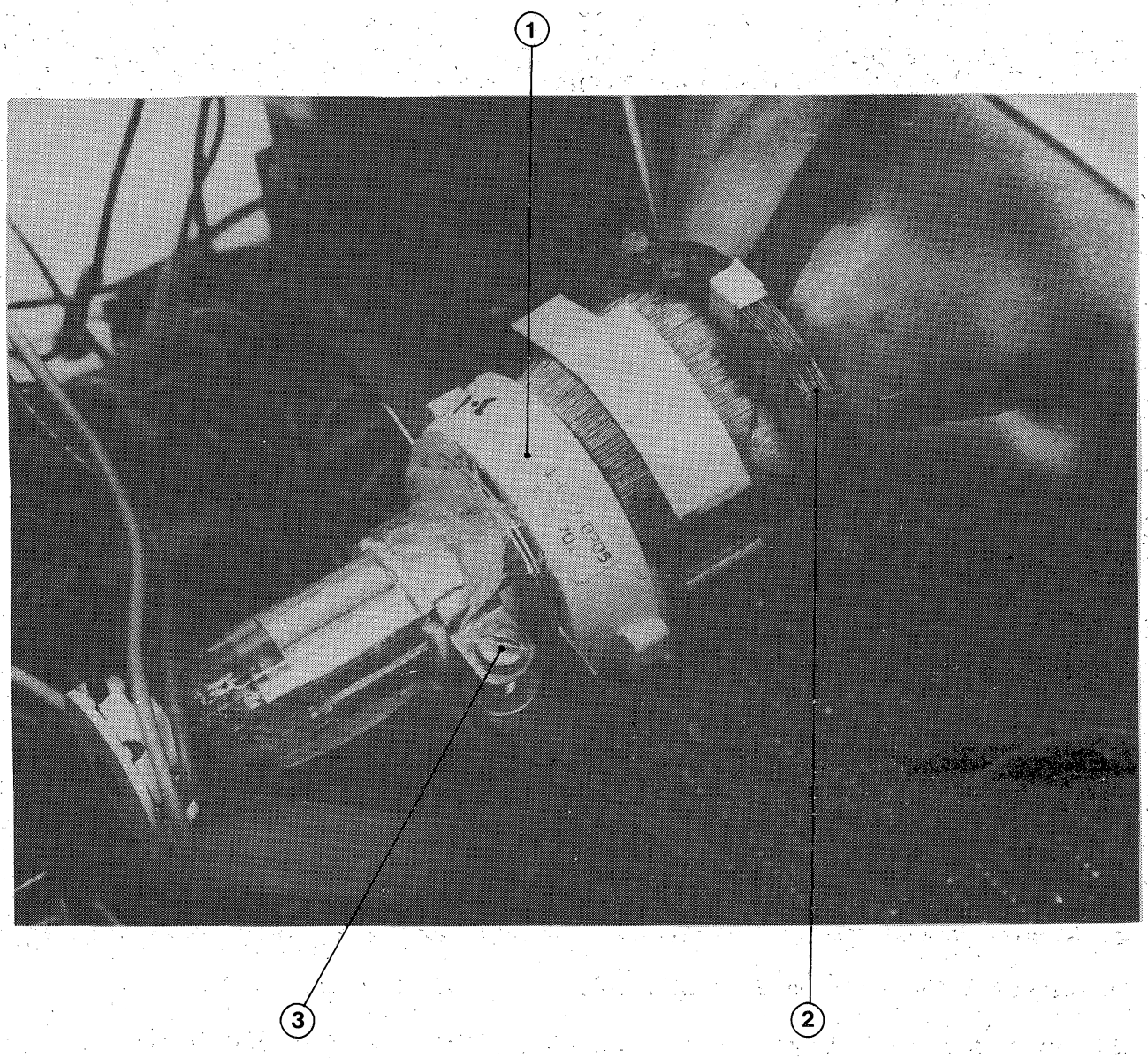

Figure 2-5

c. First correct the off-entering by rotating one or both of the two centering magnets in the deflection yoke (Pos 1) disregarding any additional tilt that may result.

d. Then correct the tilt (all characters must be vertical) by rotating the deflection yoke, keeping it firmly against the CRT bell (Pos 2).

c. Repeat steps c and d alternately until the display is tilt free and, centered within ± 1/8-inch (8.2 mm) from top to bottom. Tighten the deflection yoke clamp screw, screw enough to prevent rotation (Pos 3).

d. Adjust CRT FOCUS (subsection 2.7.1.c) and VERTICAL LINEARITY (subsection 2.7.1.h) if this affects the centering then repeat steps c through e after first loosening the deflection yoke clamp screw.

e. Set the power switch to off.

2.7.3. 60 Fields per second adjustment

This adjustment is required on units on the 50Hz mains when the picture starts to flicker.

The procedure is

a. Remove Logic Board Assembly as per subsection 2.6.4. Uncover components on Logic Board 1.

b. On header located at position 3-3

REMOVE	ADD
Header wire	
3-3-2 to 3-3-12	3-3-8 to 3-3-12
3-3-4 to 3-3-11	3-3-4 to 3-3-11

c. Replace Logic Board Assembly.

d. Adjust picture as per subsection 2.7.1 if necessary.

Chapter III: Diagrams

3.1 KEY TO DIAGRAMS

All the logic is contained on two logic p.c.b.s (LB1 & LB2), these are interconnected by a flat-flexible cable and three connectors (P13, P14 & P15). The location of chips is given by a grid reference system. For example: a chip on LB1 is referenced by 3-6-1 it means pin 1 of the chip at location column 3, row 6 as shown in figure 3.1 Similary for LB2.

3.1.2. Board Layout

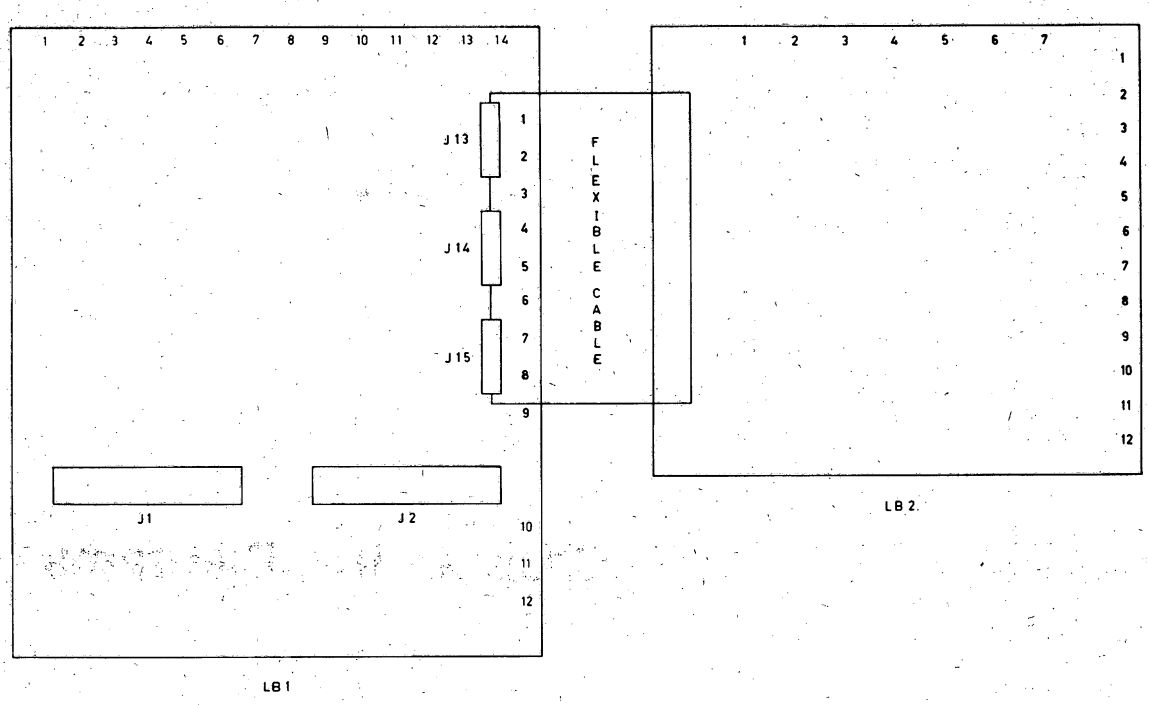

Figure 3.1

Connectors are referenced in a similar manner as shown for P1-25 in figure 3.2.

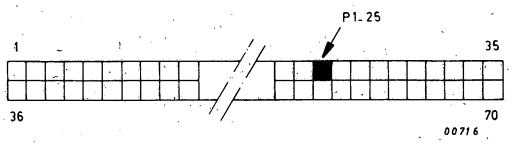

Figure 3.2

Components on the analogue boards Monitor or Power Supply pcb are referenced by a component number.

3.1.2 Logic Symbols

The majority of the logic elements in the VDT are of the TTL (Transistor Transistor Logic) technology both MSI and SSI (Medium and Small Scale Integration) types. Some MOS (Metal Oxide Silicon) technology LSI (Large Scale Integration) types are also used and all are contained in DIL (Dual In Line) packages.

The devices used in the VDT are;

A00	SN7400	N00	SN7404
A09	SN7437	N03	SN7414
A12	SN74H00	N04	SN74H04
A18	SN7408	N05	SN7405S3
A19	SN74H11	N09	SN74S04
A22	SN74H10		
A23	SN74H08	OR00	SN7402
A24	SN74H01	OR01	SN7432
		OR07	SN74128N
CNT06	NS8281		
CNT14	SN74163	REC04	SN75189A
D00	SN7474	ROM23	CM838
D02	SN74H74		
D06	SN74175	SHR07	3409 (T.I)
		SHR08	P1403A
DEC00	SN7442	SHR17	SN74166
DEC03	SN74154		
ENC02			
JK01	SN74107		
LD05	SN75188		
LSI00	TMS6010JC		
MX08	SN74157		

3.1.3 Electrical Symbols

The position of analogue elements on the p.c.b.s is given by a letter and a number (e.g. R102 represents resistor number 102, TS transistor, c capacitor etc).

The devices used; are

/uA723C /uA47812 /uA47805

3.2 SIGNAL NAMES

AN	Alpha-numeric character decode
ANI	State I of the AN p-counter
ANII	State II of the AN p-counter
ANIII	State III of the AN p-counter
AN80	80th character detected
BAA	Auxiliary transmitted data
BAI	Line transmitted data
BBA	Auxiliary received data
BBI	Line received data
BEL	BEL character decode
BELTN	Bell Tone
BREAK	Break key depressed
BRS	Baud Rate Select
BS	Backspace character decode
BSDRR	Backspace Data Ready Reset
B1H	Horizontal left margin time period
B2H	Horizontal right margin time period
B2H2°	Bit 1 of B2H
B2H2°	Bit 2 of B2H
B3H	Horizontal retrace time period
B1V	Vertical top margin time period
B2V	Vertical botton margin time period
B1-8L	Delayed output of line buffer 2
B8L'	Cursor X position CCX)
B1-7M(B)	Output of memory port B
B1-7M(A)	Output of memory port A (option)
B1-7M(C)	Output of memory port C
B1-7M(D)	Output of memory port D
CAA	Auxiliary request to send
CAI	Line request to send
CBA	Auxiliary ready for sending
CBI	Line ready for sending
CCA	Auxiliary data set ready
CCI	Line data set ready
CDI	Line data terminal ready
CEI	Line calling indicator
CFI	Line received signal detector
CHI	Data Signalling Rate Selector
CHRSEL	Character select
CLR	Clear character decoded
CLEAR	Output of the clear F/F
COL1	Function decoder column 1
CR	Cursor return character decode
CRI	CR p-counter state I
CRII	CR p-counter state II
CRIII	CR p-counter state III
CURSOR	Cursor generation signal
DATA	Data generation signal
DLE	Delete character decoded
DR	Data ready
DRR	Data ready reset
DSRLMP	Data set ready lamp
DTR	Data terminal ready
DISCH	Discharge signal

ENQ	Enquire character decoded
ENTIO(8)	Enter I/O character at port B
ENTIO(A)	Enter I/O character at port A
EPAR	Even parity selected
HDFM	Horizontal drive for monitor
HDUP	Half duplex selected
HONE	Home character decoded
HOMEI	Output of Home F/F
HSCI	Horizontal state counter state I
HSCII	Horizontal state counter state II
HORCO	Horizontal counter carry output
HRISW	Here is switch
HUNBL	Horizontal unblank time period
INH6M(B)	Inhibit bit 6 at port B (Y cursor)
INH6M(A)	Inhibit bit 6 at port A (Y cursor)
IOB1-7	Input output (bits received)
KBSTRB	Keyboard strobe
KBSTIN	Keyboard strobe inhibit
LC	Lower case
LC13	Line counter equals 13
LF	Line feed character decoded
LFEN (A)	Line feed enable
LFI	Line feed p-counter state I
LFII	Line feed p-counter state II
LFIII	Line feed p-counter state III
LLB1	Load line buffer 1
LLB2	Load line buffer 2
LINE	
MAINR	Main reset
MARKER(A)	Marker detected at memory port A
MARKER(B)	Marker detected at memory port B
MDI	Main data inhibit
MG	Memory gap
MKW6M(B)	Marker write bit 6 of memory
MONVID	Monitor video signal
NSB	Select 2 stop bits
NPAR	No parity selected
ONL	On line switch set
PER	Parity error reset
PELMR	Parity error lamp
PRBSY	Printer busy
PRCBM	Printer CA mode
PROLM	Printer on line mode
PRSTRB	Printer strobe
PRSTIN	Printer strobe inhibit
PTOR1-3	Power turn on reset

RDA	Received data avalible
RDB1-7	Received data bits from UART
RECDI	Received data inhibit
REFCSK	Refresh counter skip count
RESYNC	Resync vertical scan
RSYNCIN	Resync enable signal
RETURN	Supply Line return
RFE	Received data frame error
ROW12	Function decoder row 12
ROW13	Function decoder row 13
RPE	Received data parity error
RTCP	Received transmit clock
RSI	Received signal input
RUA	Roll up at memory port A
RUB	Roll up at memory port B
SAA	Supervisory Transmit Aux
SAI	Supervisory Transmit Line
SBA	Supervisory Receive Aux
SBI	Supervisory Receive Line
SPRCO	Sprocket three counter output
SPRW	Write sprockets
SPSW	Spare switch
SUI	Set up p-counter state I
SUII	Set up p-counter state II
TBMT	Transmit signal
TEOC	Transmit end of character data
T0-G	Basic system timing T pulses
TSO	Transmitted signal output
TYPEN	TTY/TYPEN switch set.
W5M(A)	Write marker at memory port A
W5M(B)	Write marker at memory port B
W7M(AB)	Write sprocket in memory
XTMB1-7	Data bus from keyboard
VC01	Carry out of Hor conter stage 1
VDR	Vertical drive
VDFM	Vertical drive for monitor
VERCO	Vertical counter carry output
VIDEO	Video signal
VSCI	Vertical state counter state I
VSCII	Vertical state counter state II
VUNBL	Vertical unblank signal
ØMEMEN	Main memory enable
ØMEMINH	Main memory inhibit
ØL	Line buffer clock
ØL1	Line buffer 1 clock
ØL2	Line buffer 2 clock
Ø1EN	Enable 1
Ø2EN	Enable 2
LØCL	Main memory clock
16XCLK	16X Baud rate clock
I03EN	Enable 103 character set
IOMCLK	10MHz clock

3.3 INTERCONNECTIONS

3.3.1 External Interfaces

EIA CONNECTOR

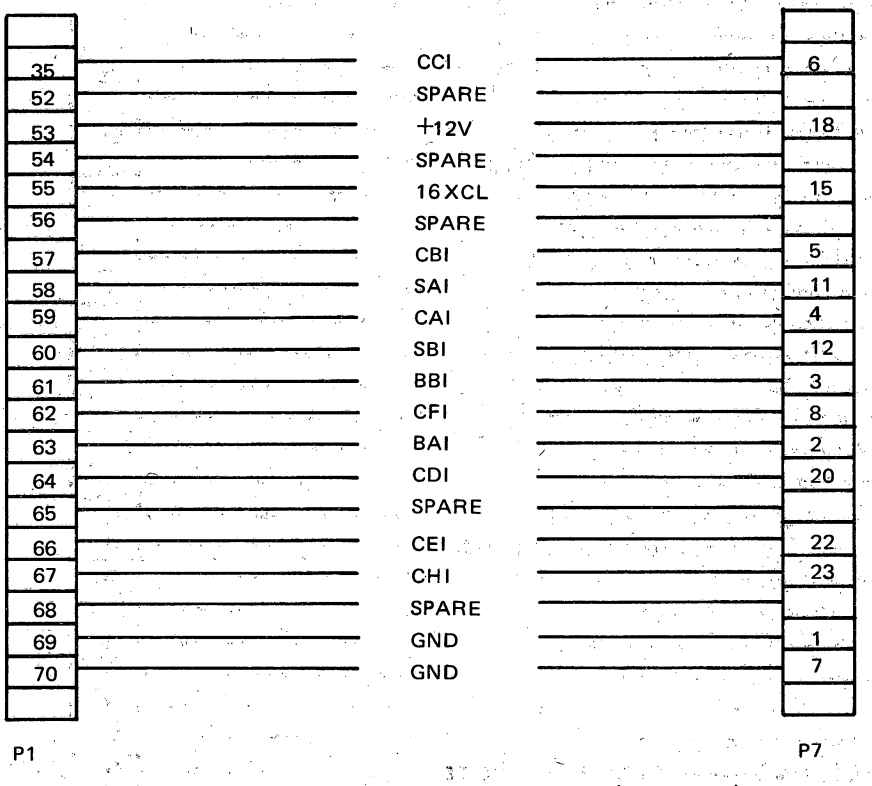

AUXILIARY EIA CONNECTOR (OPTION)

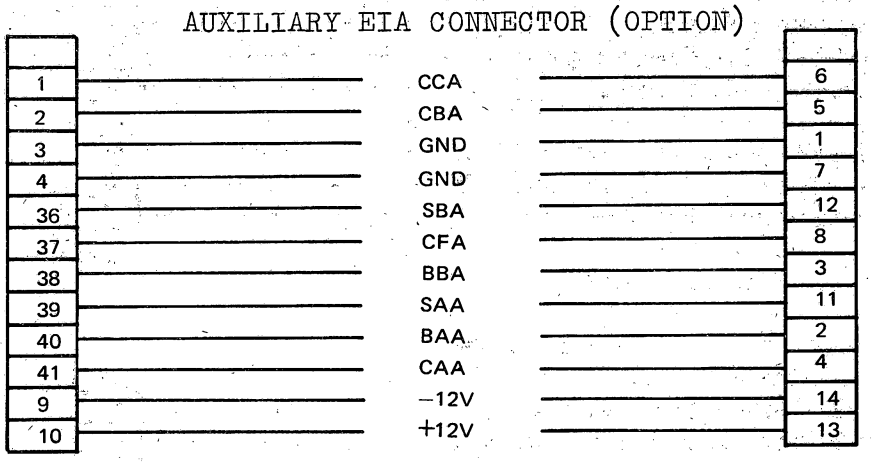

PRINTER (OPTION)

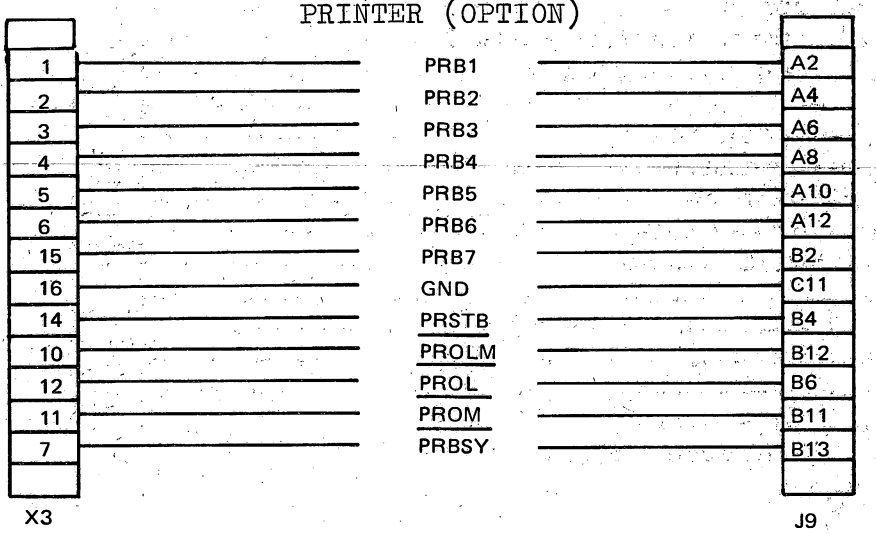

3.3.2 Internal Interfaces

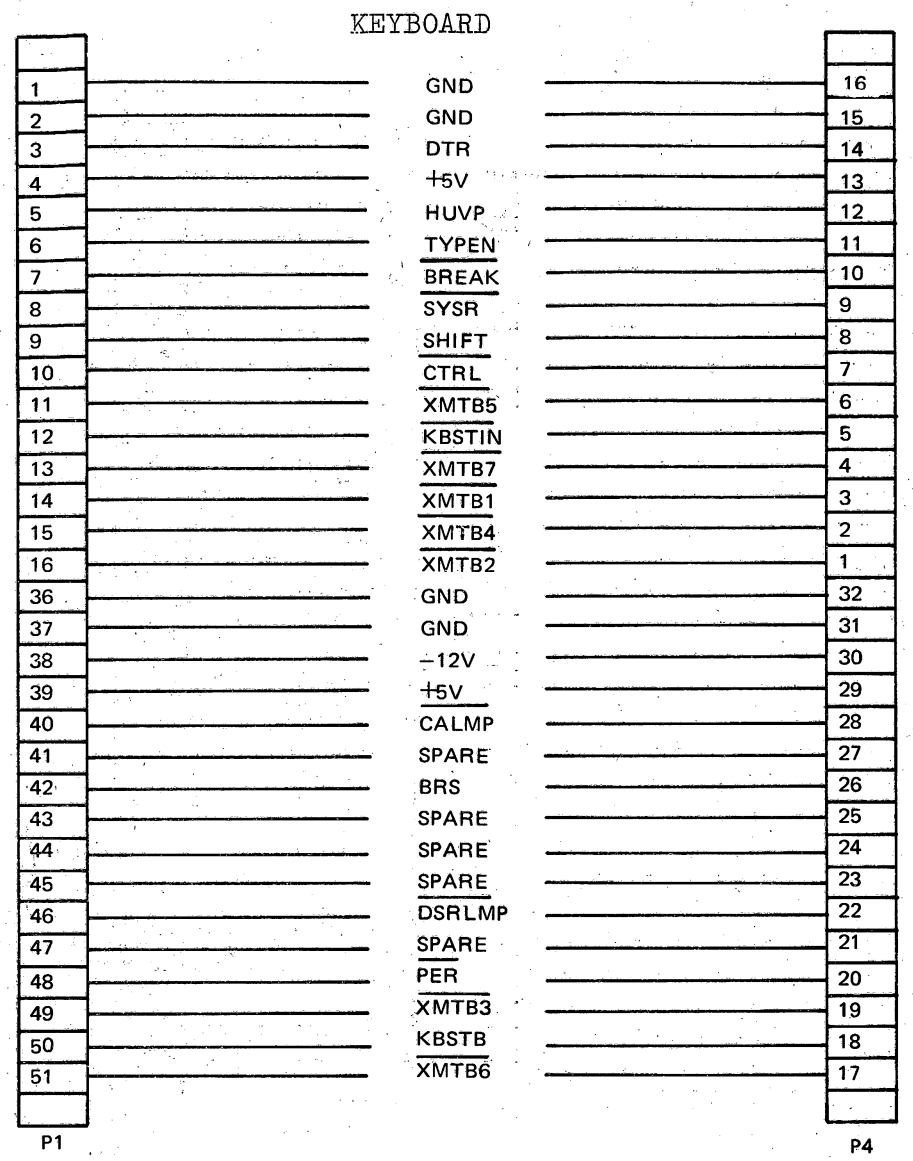

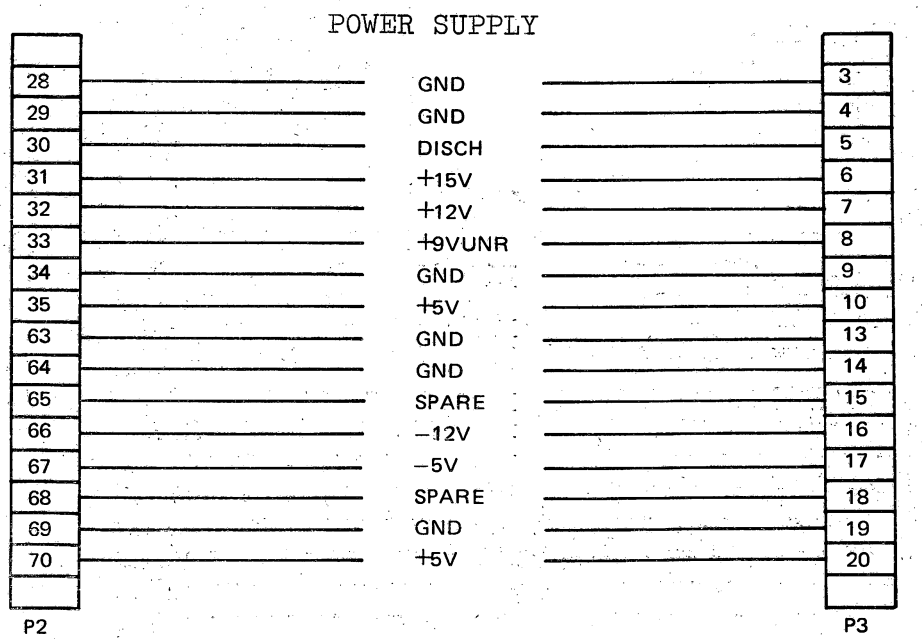

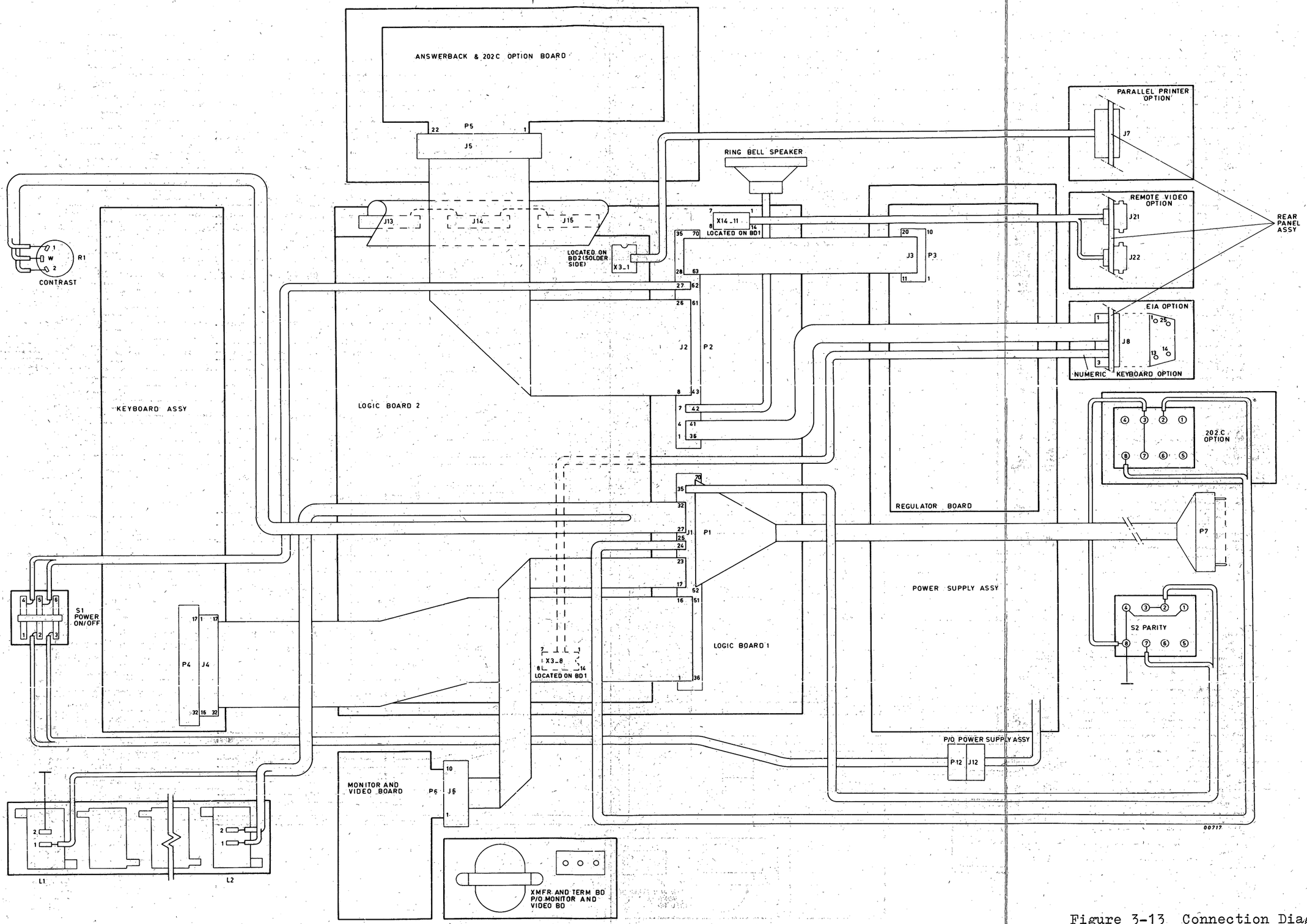

Figure 3-13 Connection Diagram

LOGIC BOARD 1 TO 2

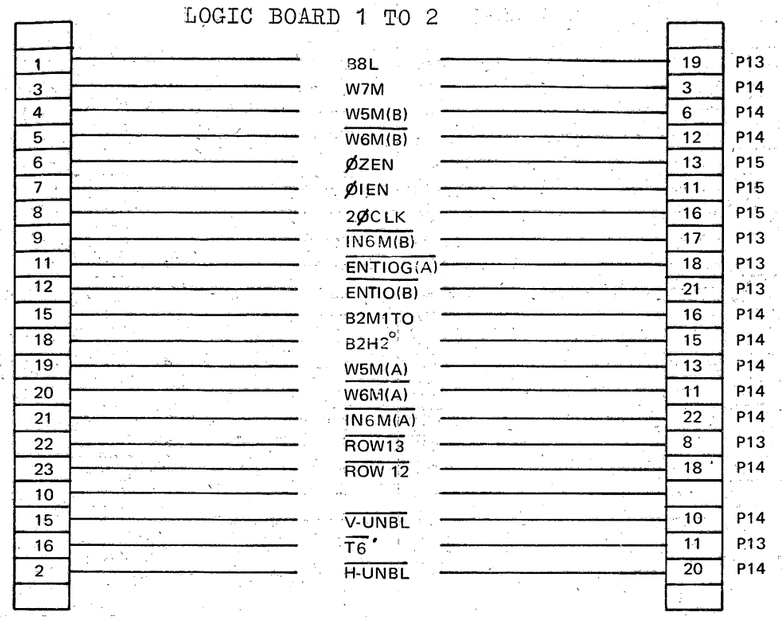

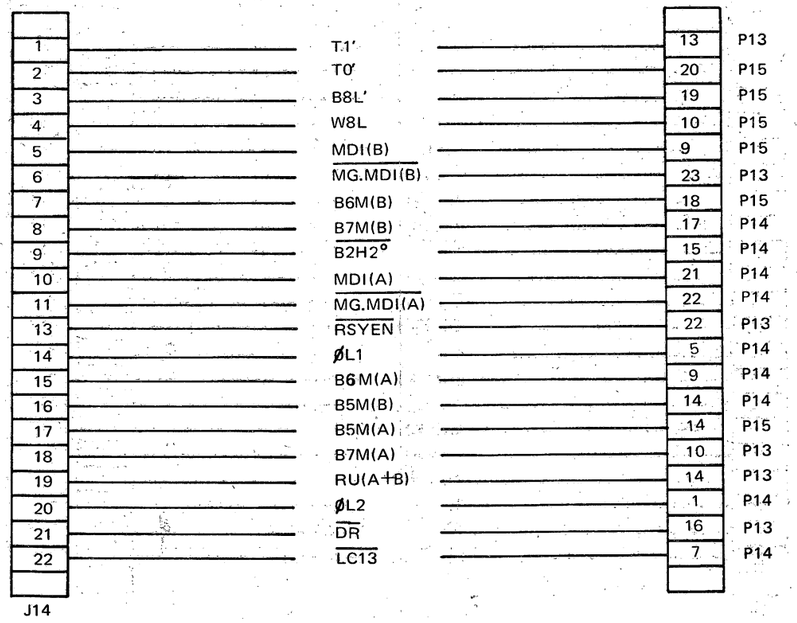

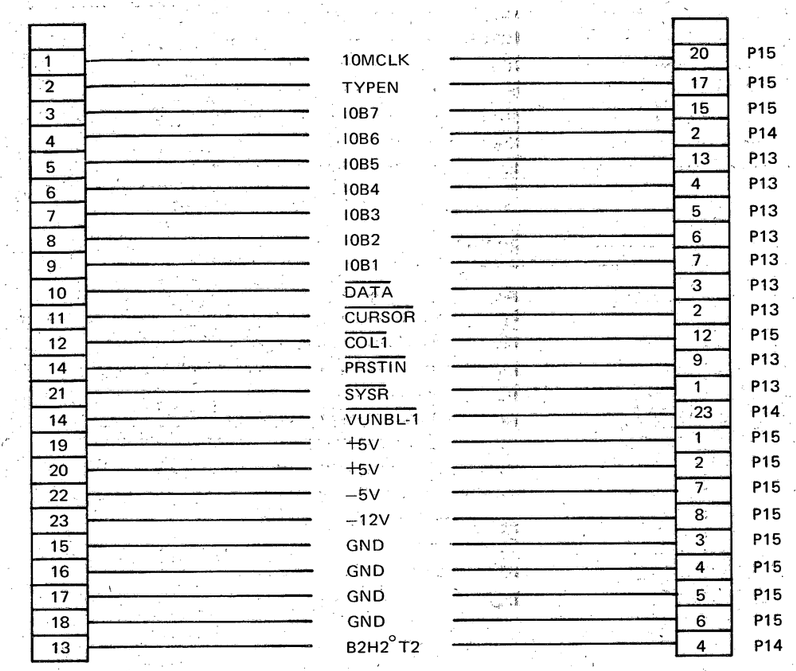

OPTION BOARD

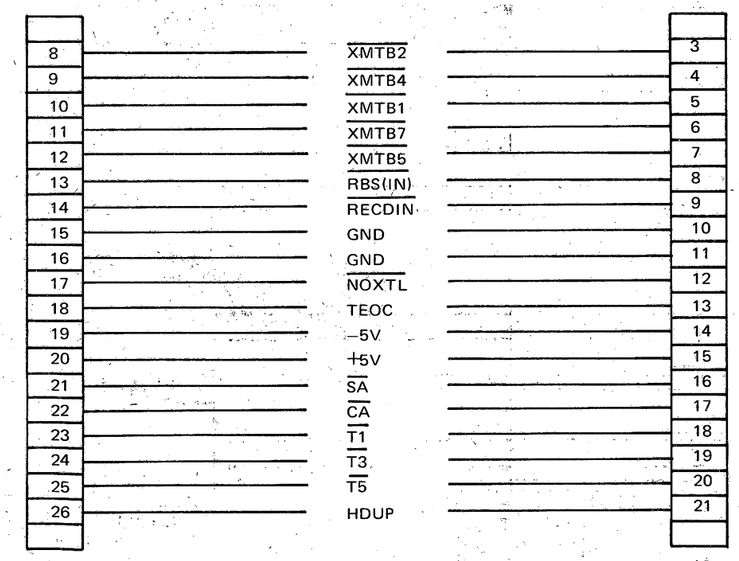

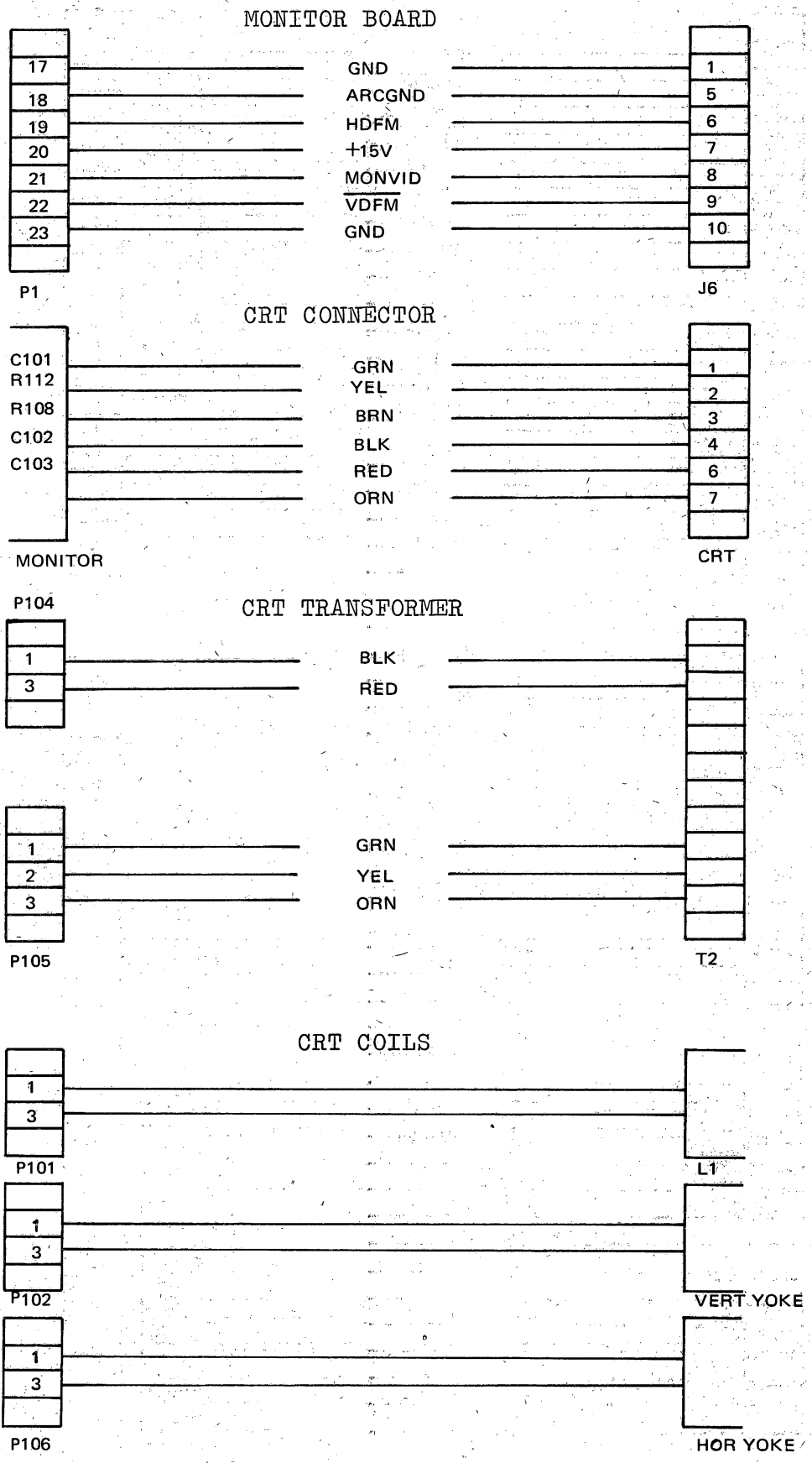
MONITOR BOARD
17
18
19
20
21
22
23
P1
GND
ARCGND
HDFM
+15V
MONVID
VDFM
GND
1
5
6
7
8
9
10
J6
CRT CONNECTOR
C101
R112
R108
C102
C103
MONITOR
GRN
YEL
BRN
BLK
RED
ORN
1
2
3
4
6
7
CRT
P104
CRT TRANSFORMER
1
3
BLK
RED
1
2
3
P105
GRN
YEL
ORN
T2
CRT COILS
1
3
P101
L1
1
3
P102
VERT YOKE
1
3
P106
HOR YOKE

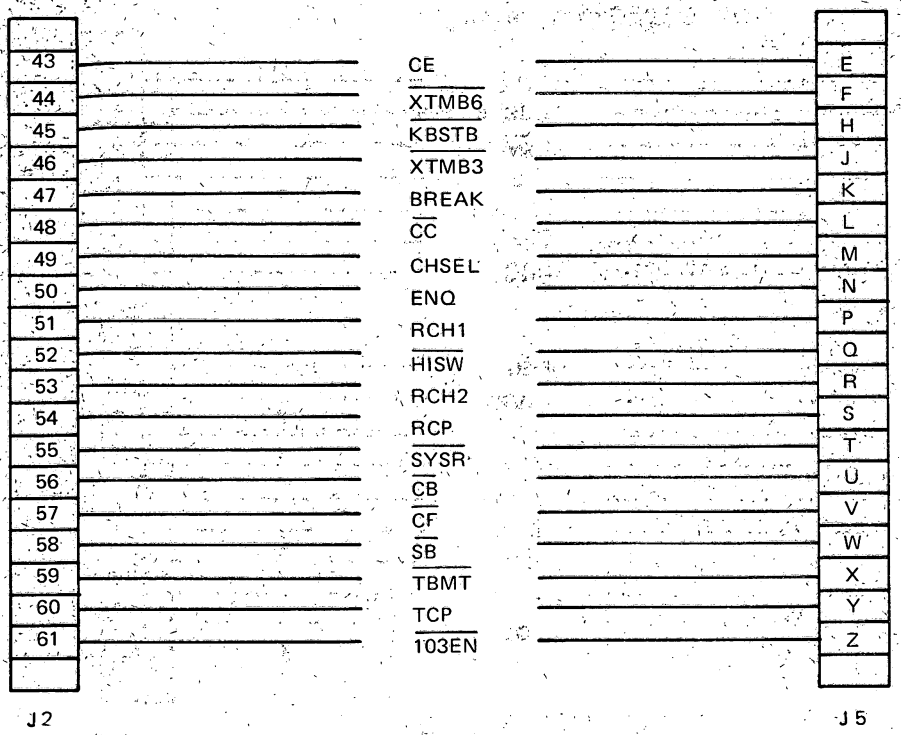

SPEAKER

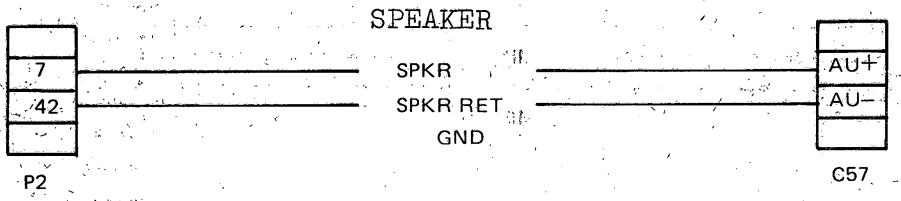

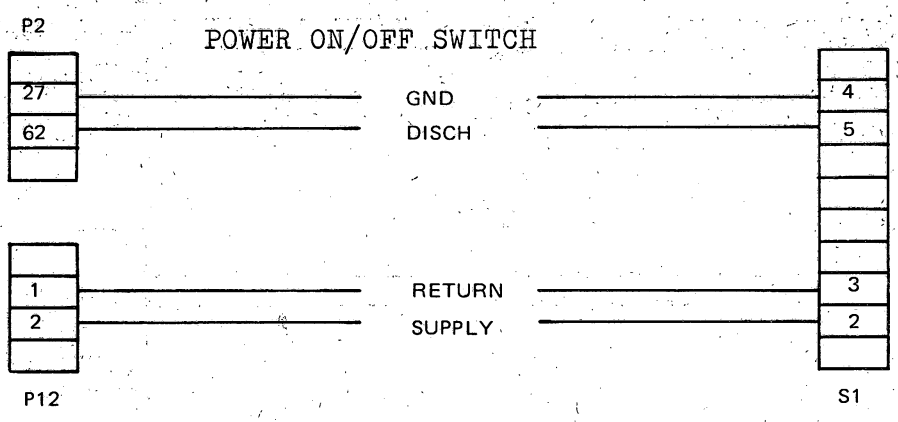

PARITY SELECT

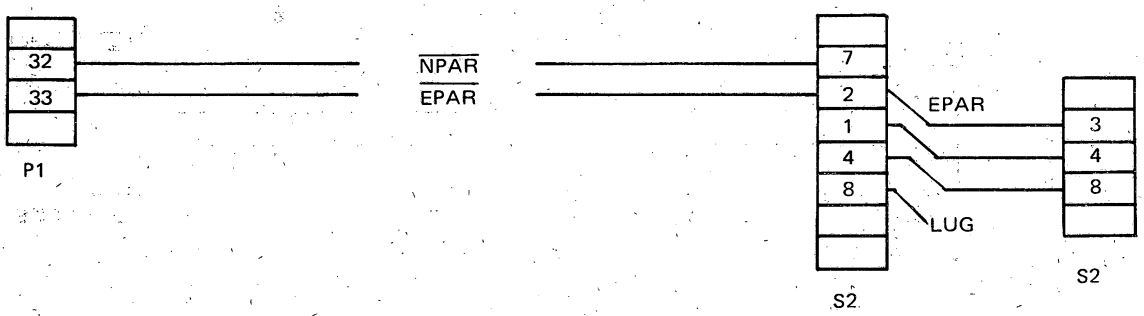

202 OPTION

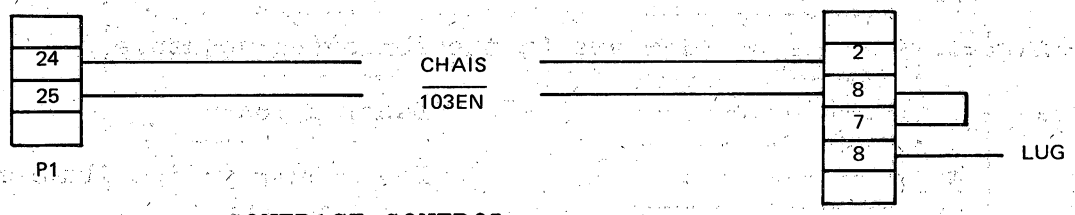

CONTRAST CONTROL

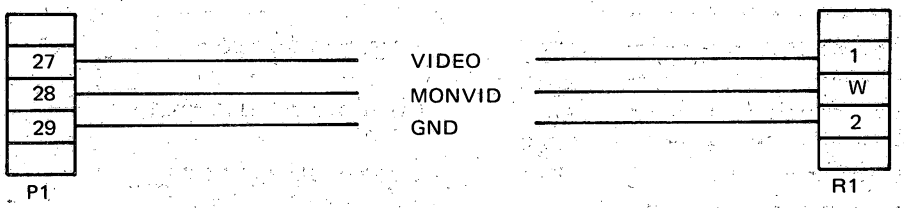

LAMPS

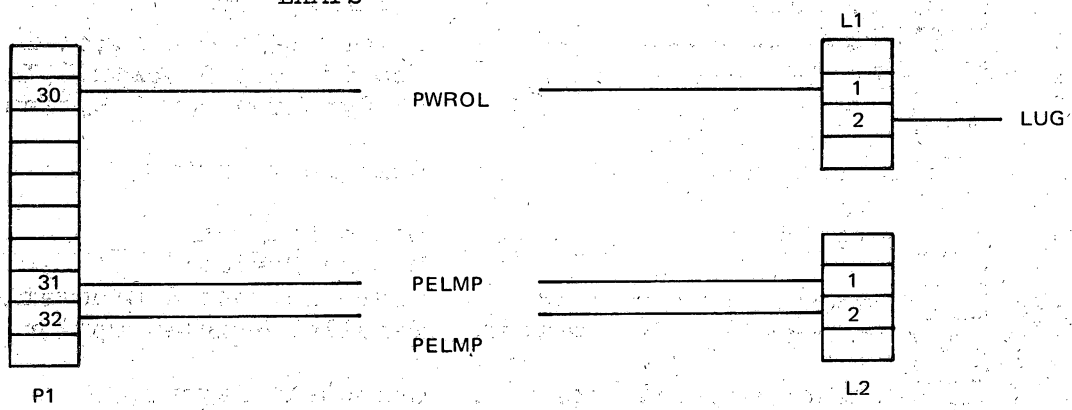

3.4 DIAGRAMS

The diagrams in this section are in the following sequence,

Figure	Board Name	Description
3.4		Power Supply Distribution
3.5	Keyboard	Component Layout
3.6	Keyboard	Logic Diagram
3.7	Logic Board 1	Component Layout
3.8	Logic Board 1	Logic Diagrams
3.8.1		I/O Logic I
3.8.2		I/O Logic II
3.8.3		Memory Edit & Control I
3.8.4		Memory Edit & Control II
3.8.5		TV Synchroniser & System Timing
3.9	Logic Board 2	Component Layout
3.10	Logic Board 2	Logic Diagram
3.10.1		Memory System
3.10.2		Video Refresh & Generation
3.10.3		Parallel Printer Option
3.11	Monitor Control Board	Component Layout
3.12	Monitor Control Board	Electronic Diagram
3.13	Power Supply (Regulator Board)	Component Layout
3.14	Power Supply	Electronic Diagram

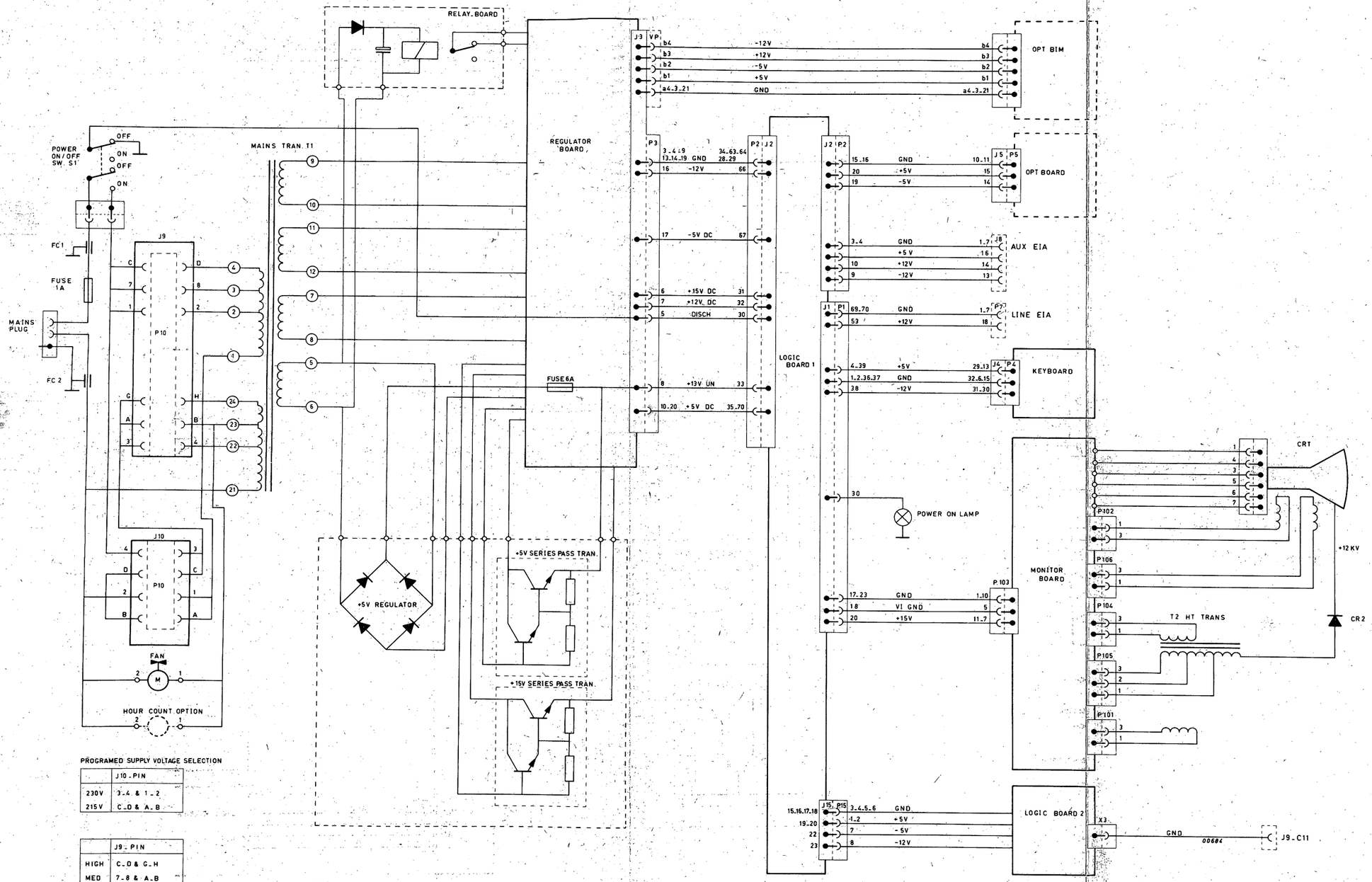

PROGRAMED SUPPLY VOLTAGE SELECTION

	J10 PIN
230V	3-4 & 1-2
215V	C-D & A-B

	J9 PIN
HIGH	C-D & G-H
MED	7-8 & A-B
LOW	1-2 & 3-4

Figure 3-4 Power Supply Distribution

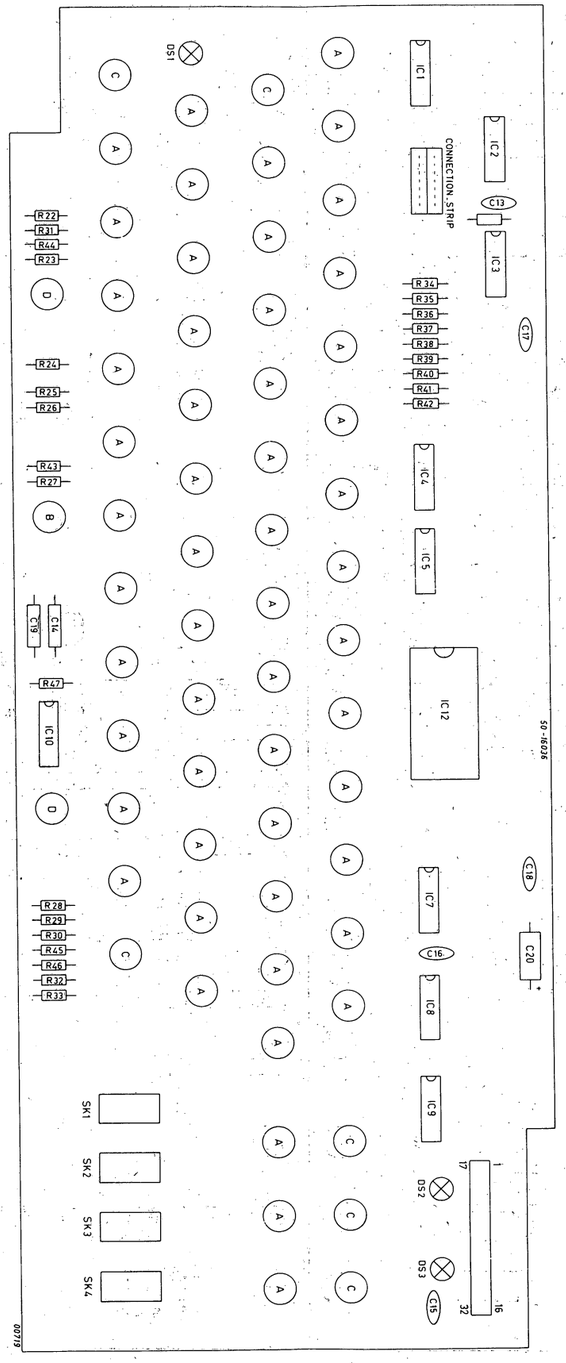

Figure 3-5
Keyboard Component Layout

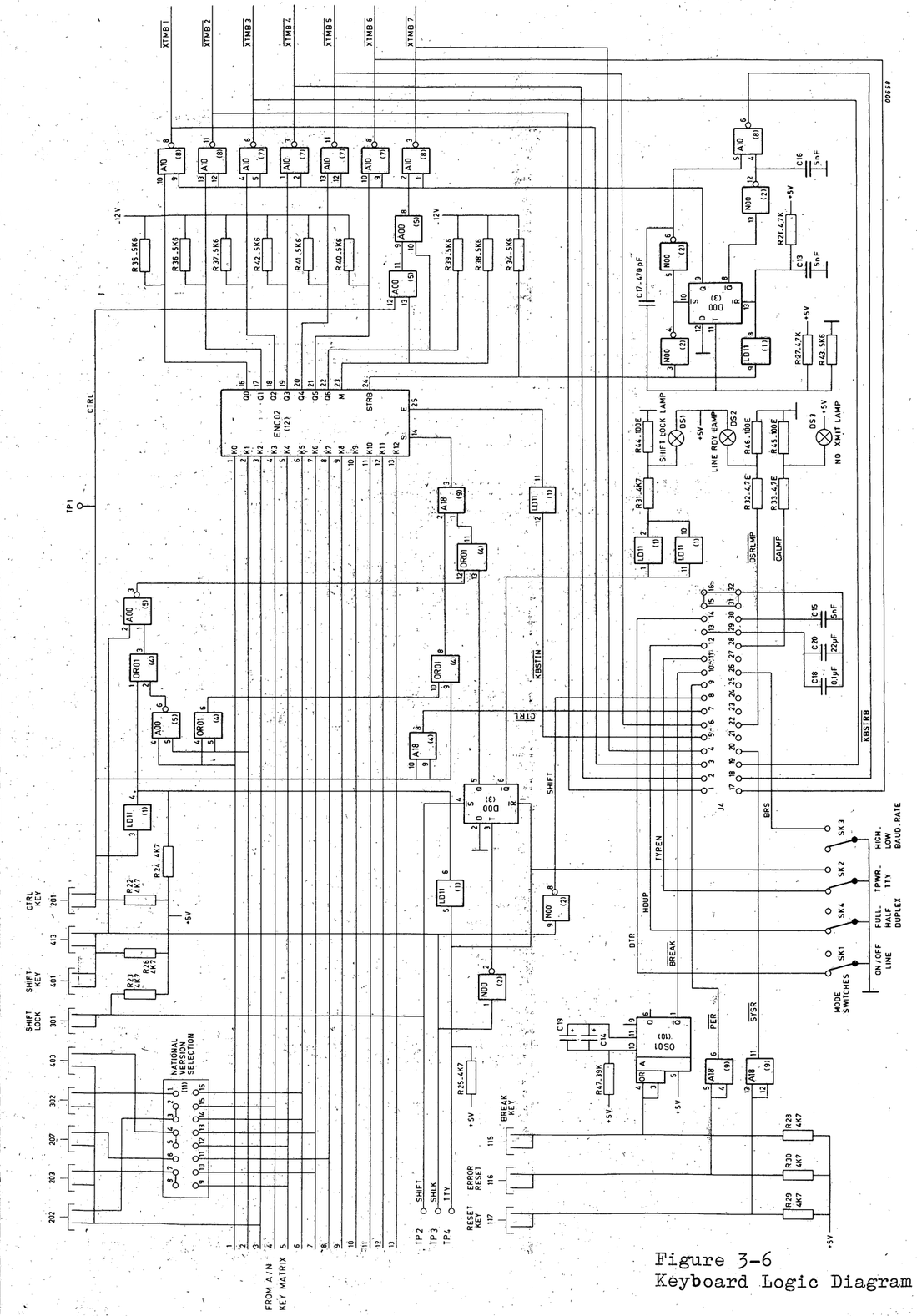

Figure 3-6
Keyboard Logic Diagram

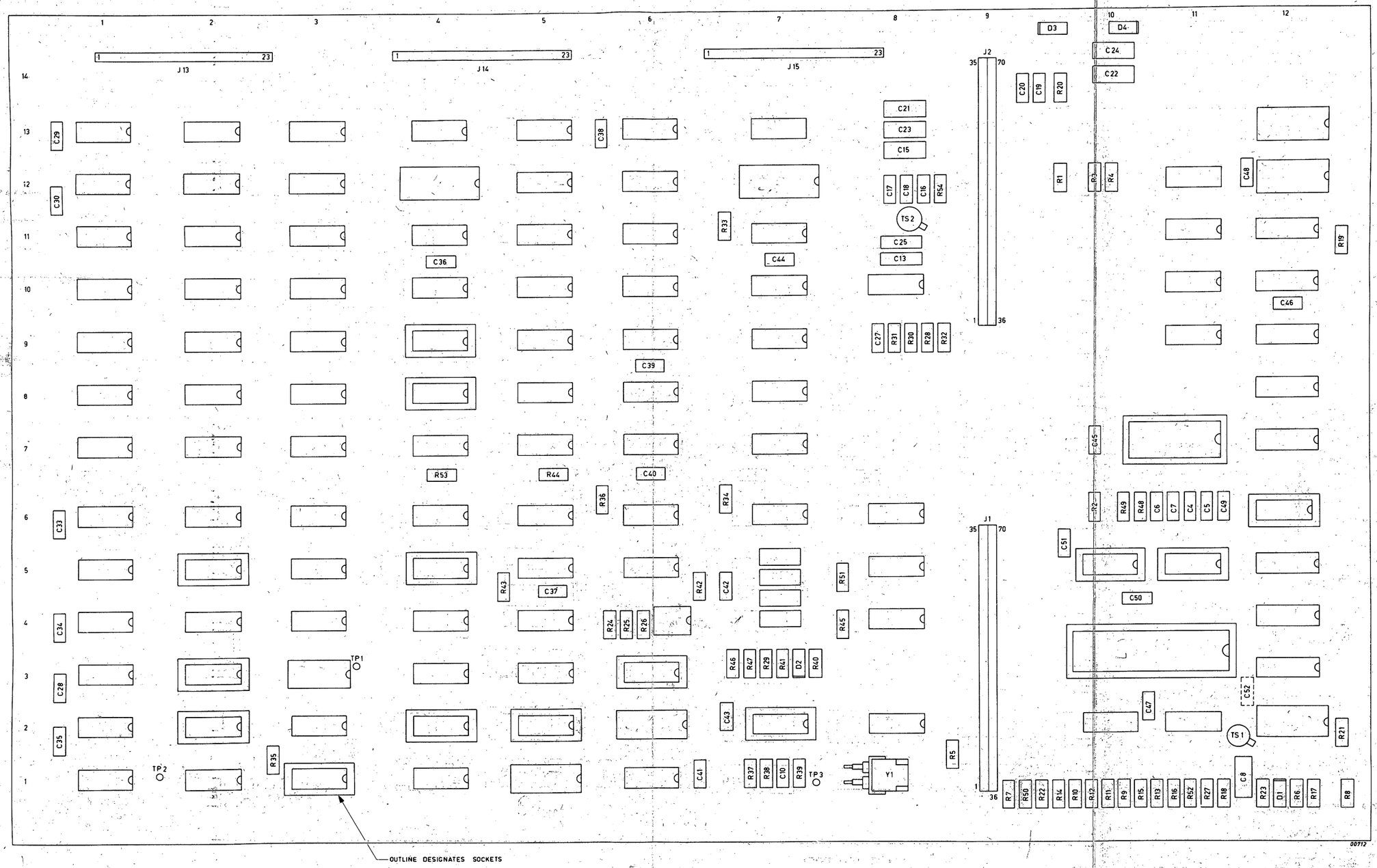

Figure 3-7 Logic Board 1 Component Layout

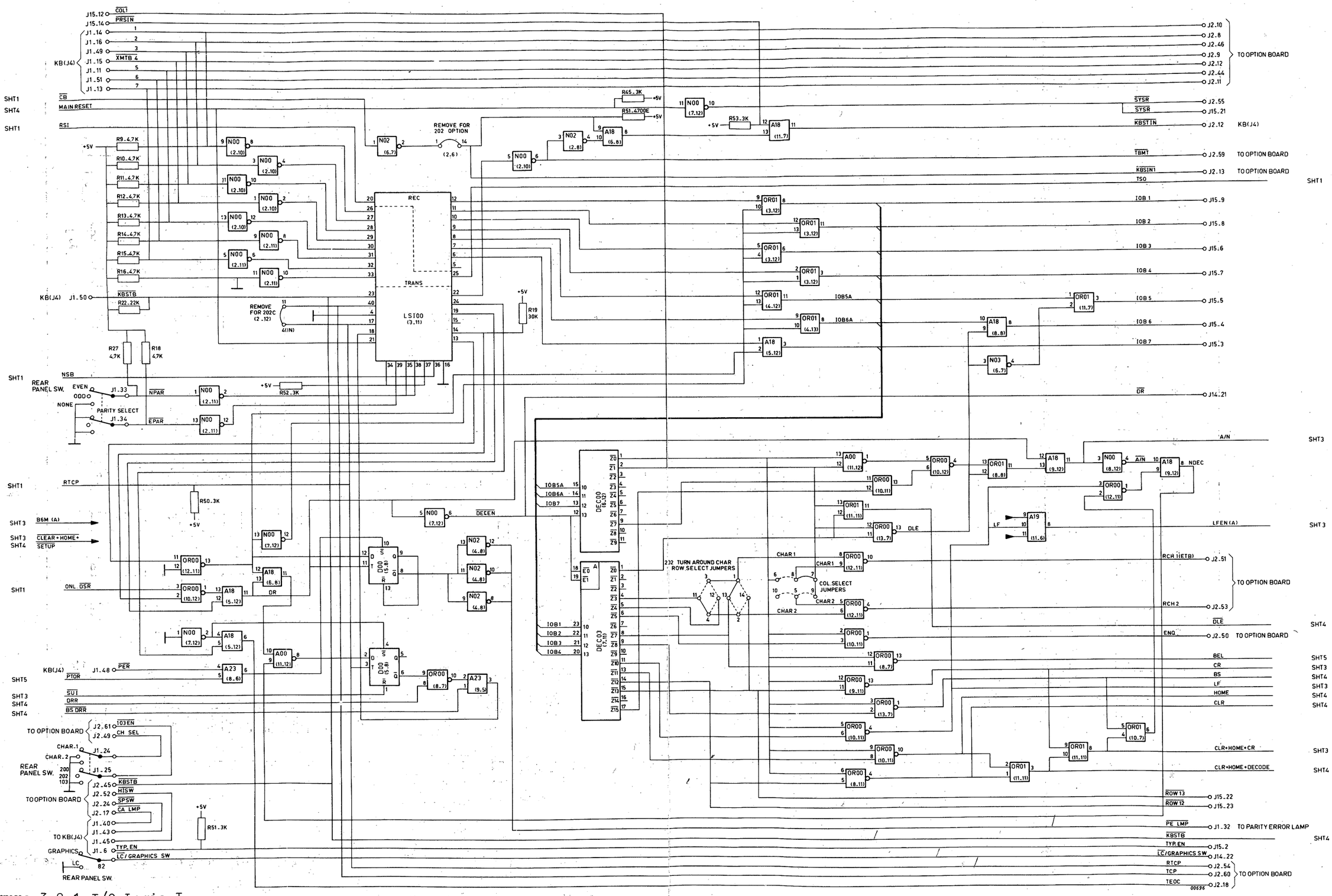

Figure 3-8-1 I/O Logic I

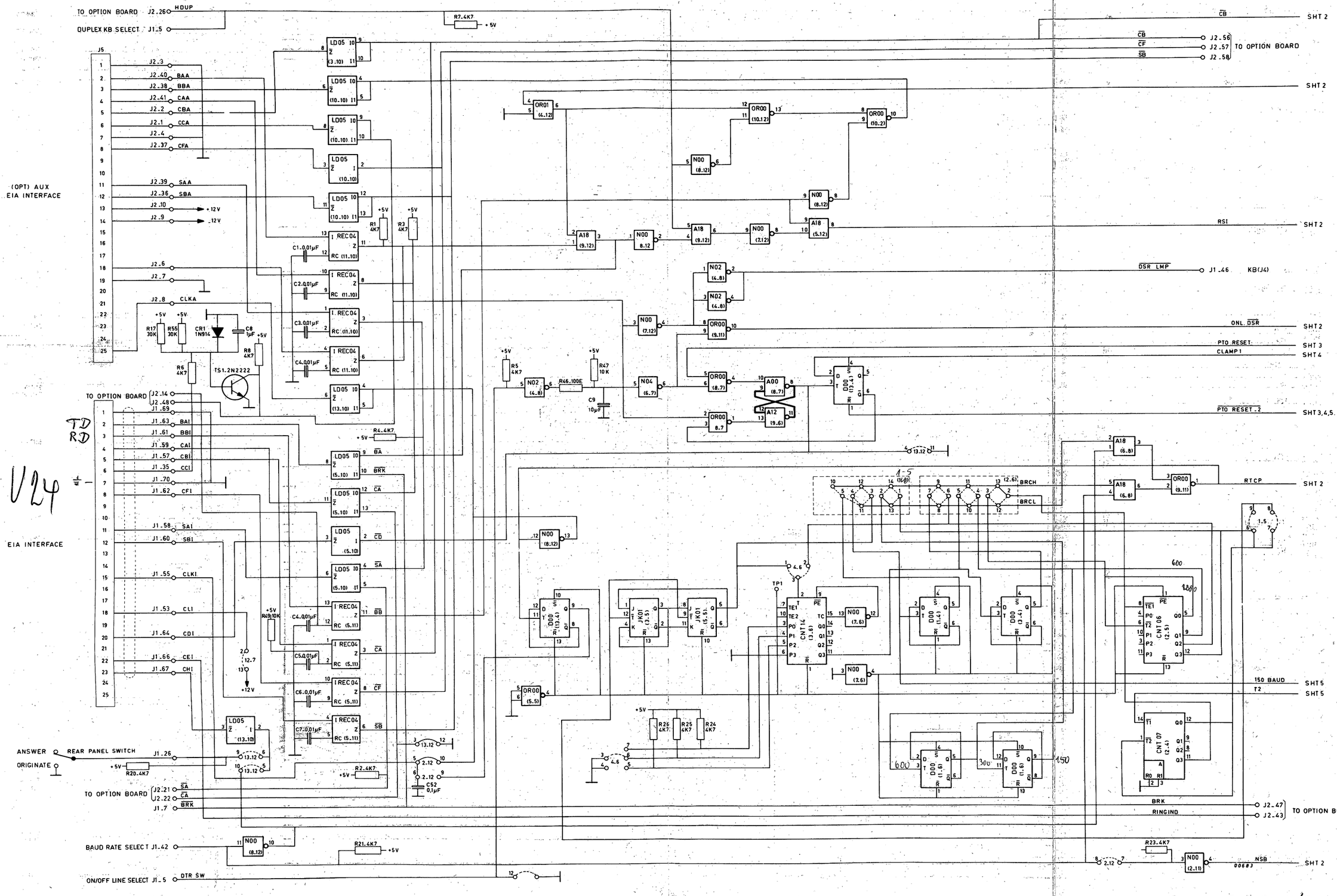

Figure 3-8-2 I/O Logic II

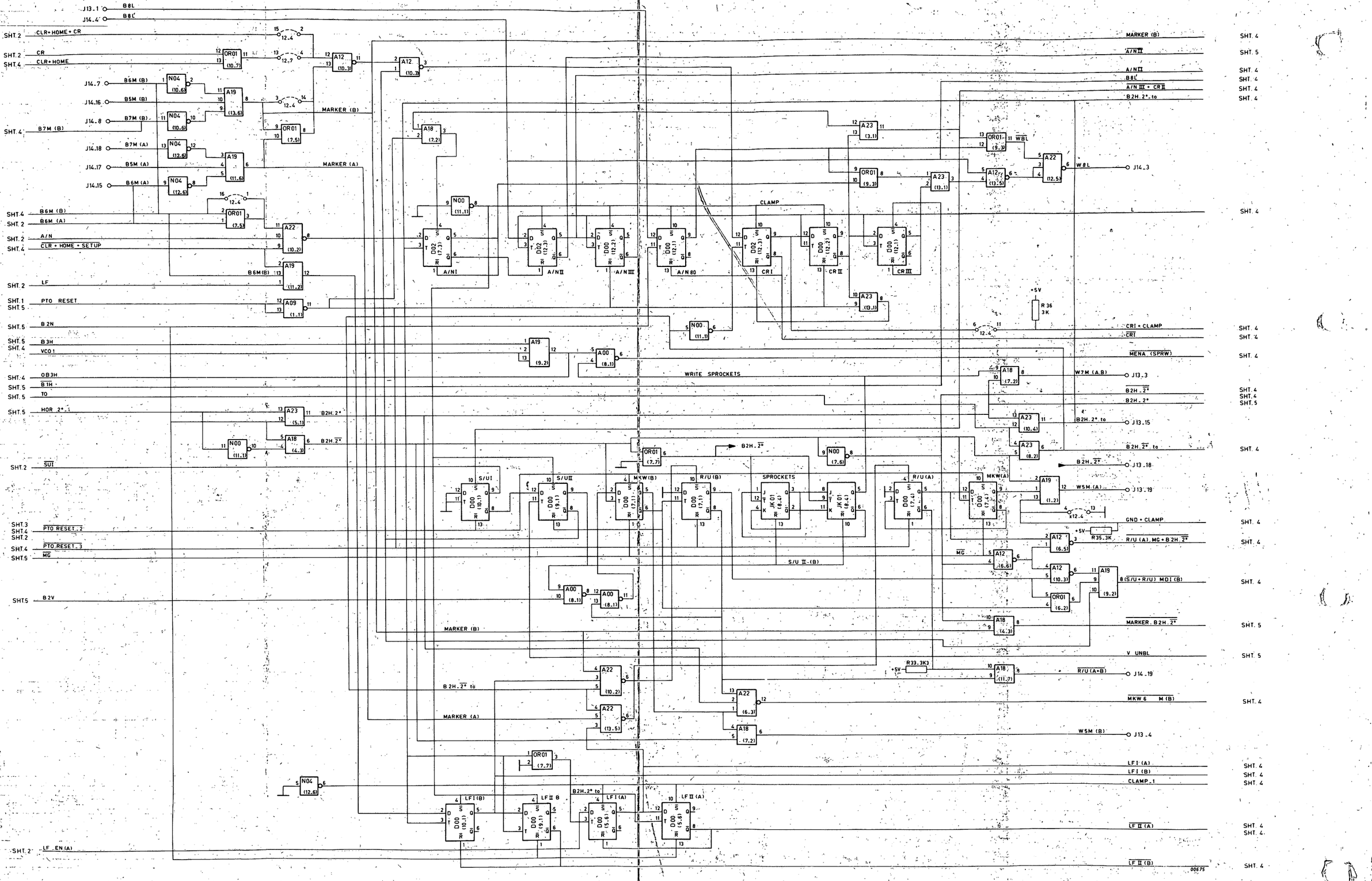

Figure 3-8-3 Memory Edit & Control I

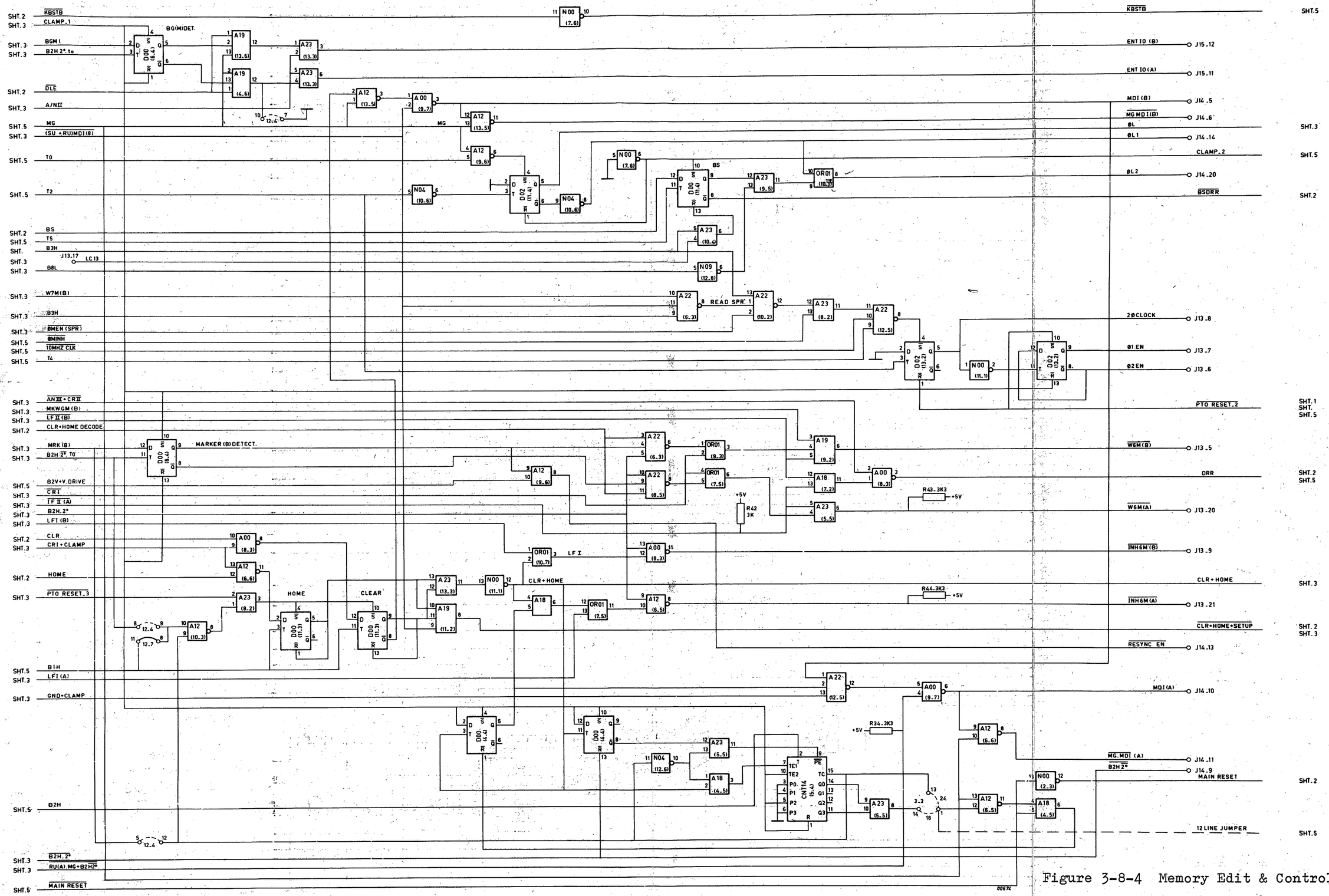

Figure 3-8-4 Memory Edit & Control II

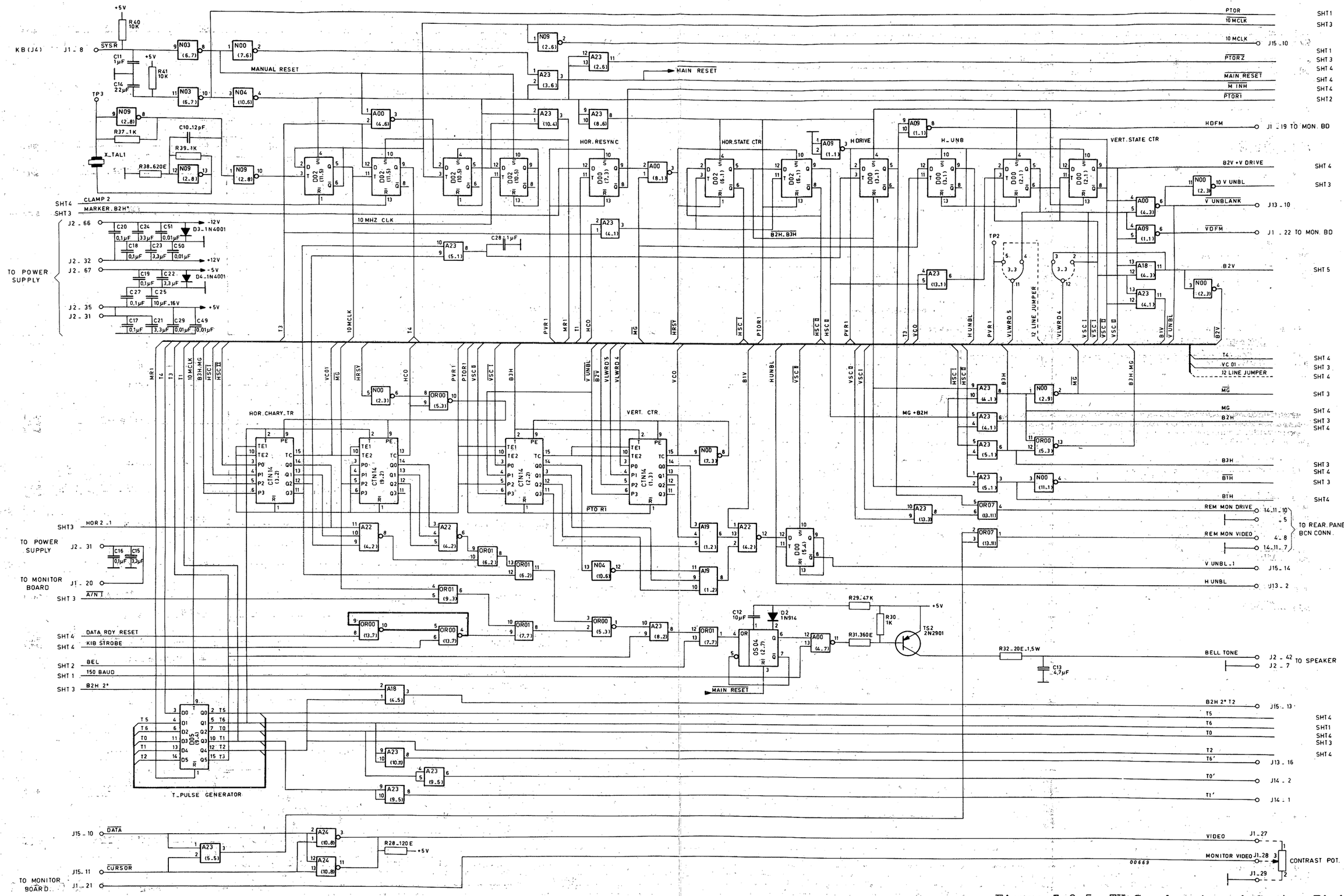

Figure 3-8-5 TV Synchroniser & System Timing

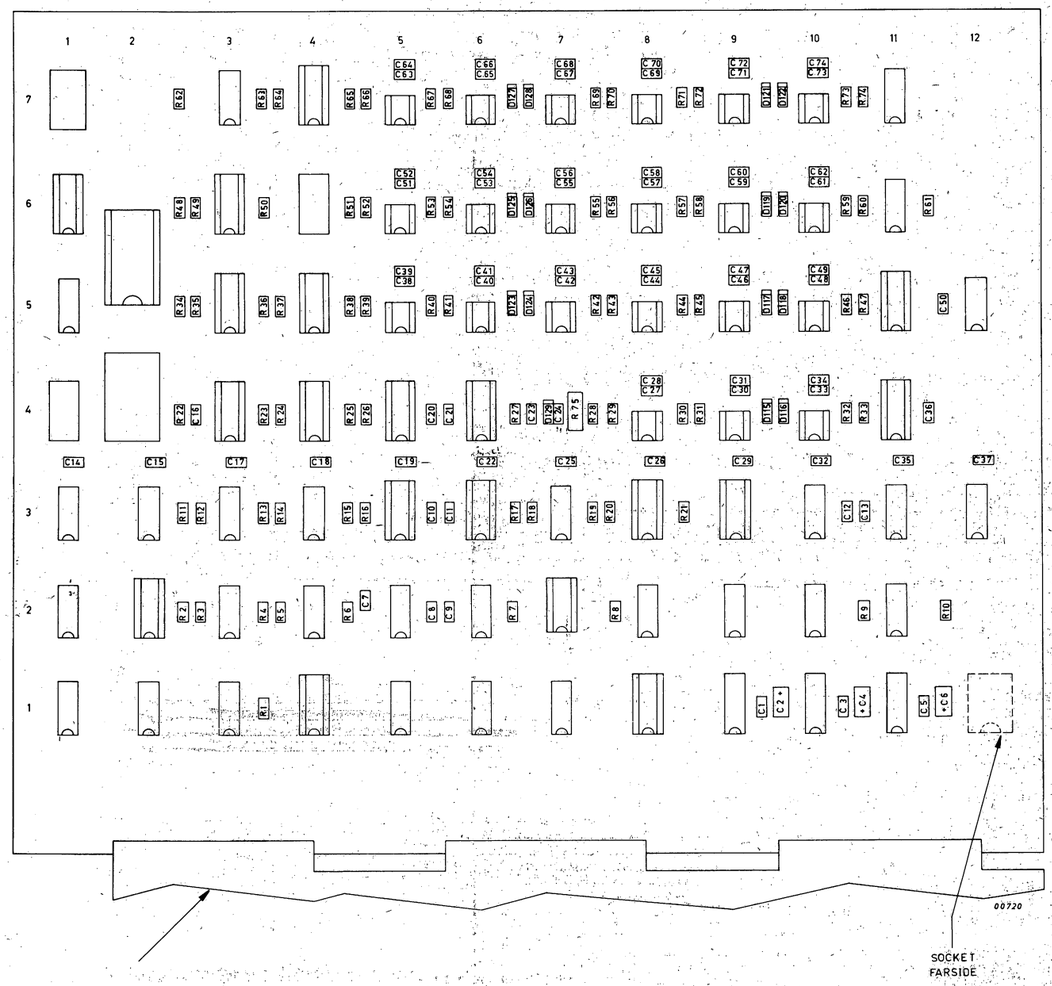

Figure 3-9 Logic Board 2 Component Layout

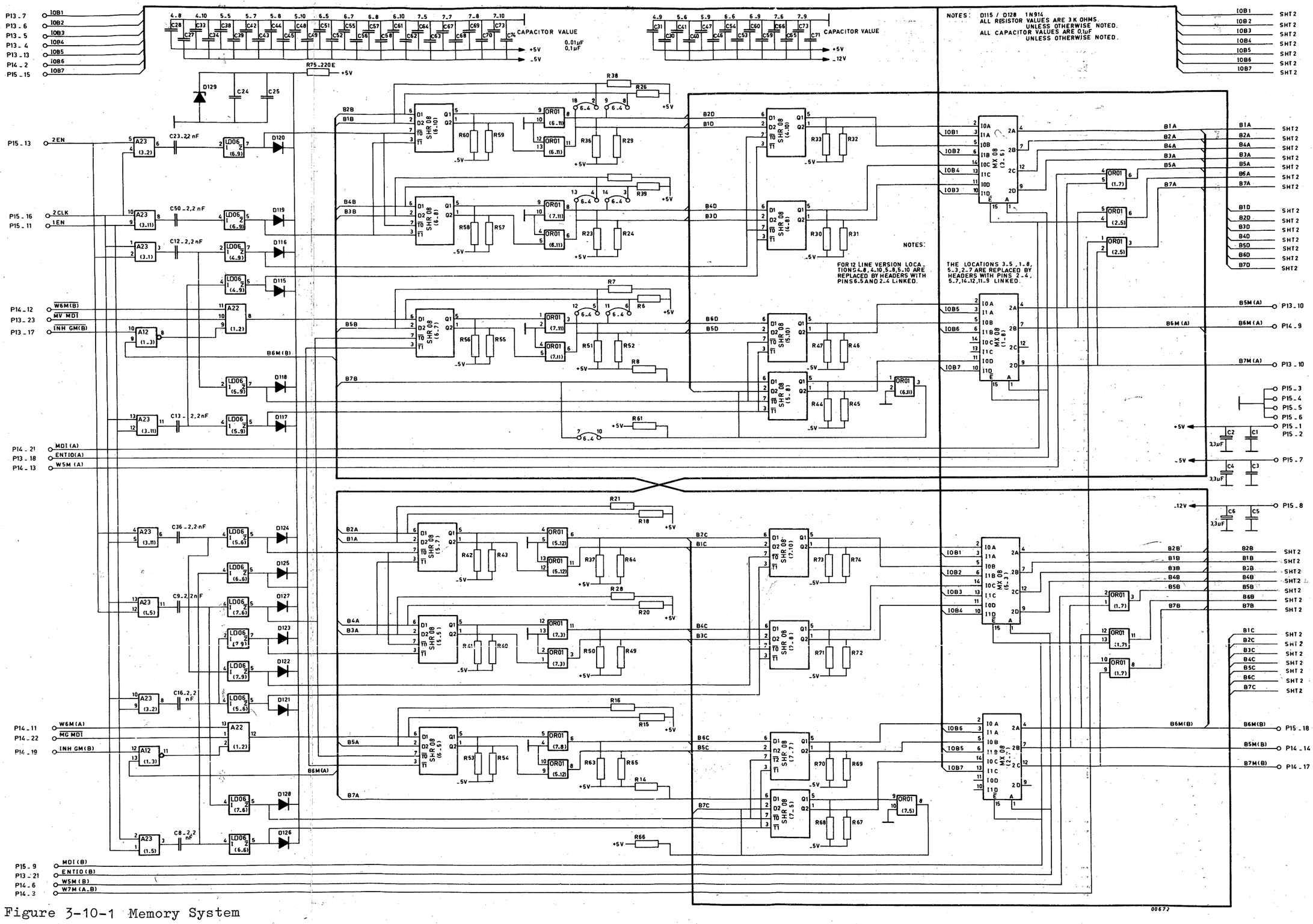

Figure 3-10-1 Memory System

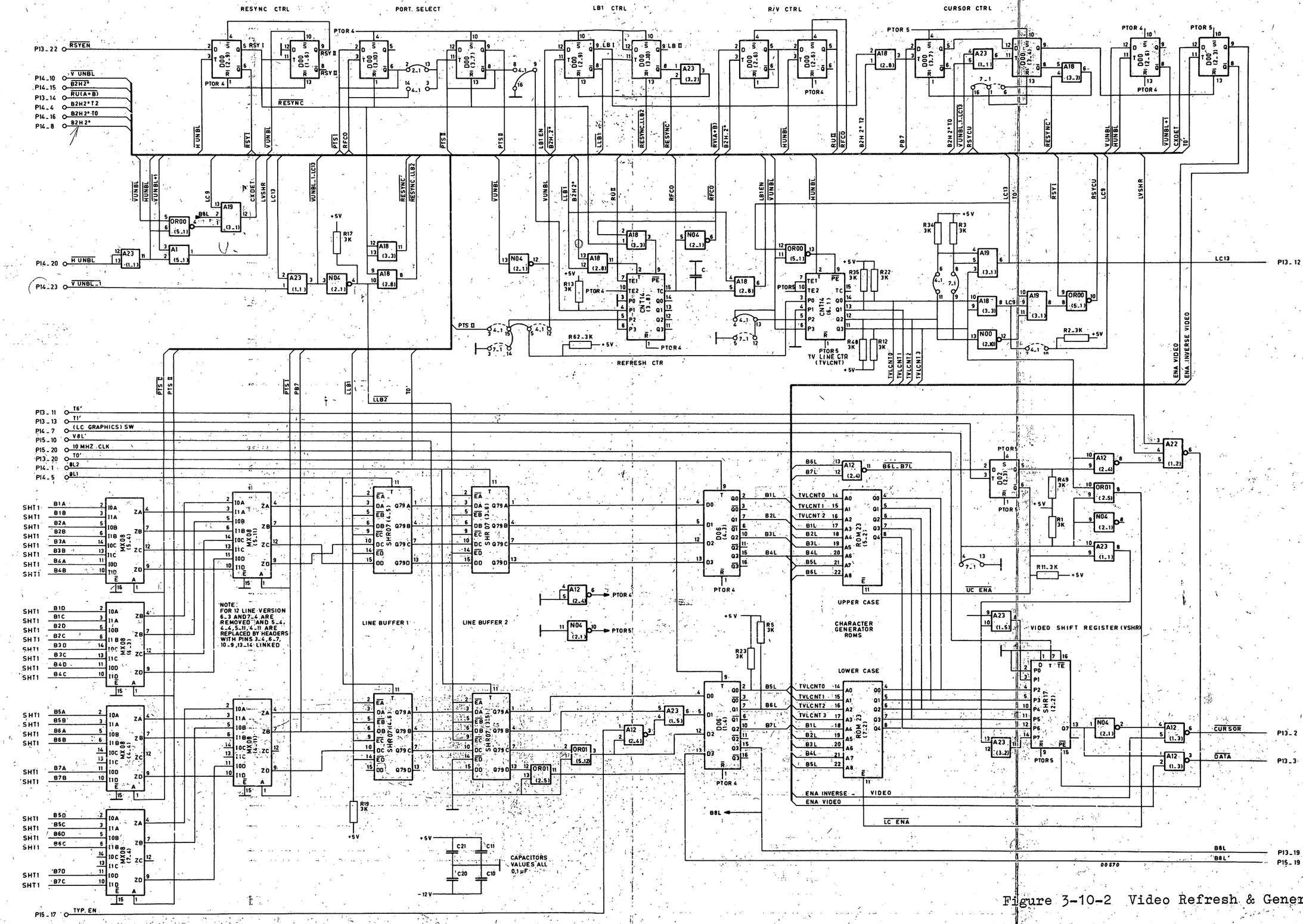

Figure 3-10-2 Video Refresh & Generation

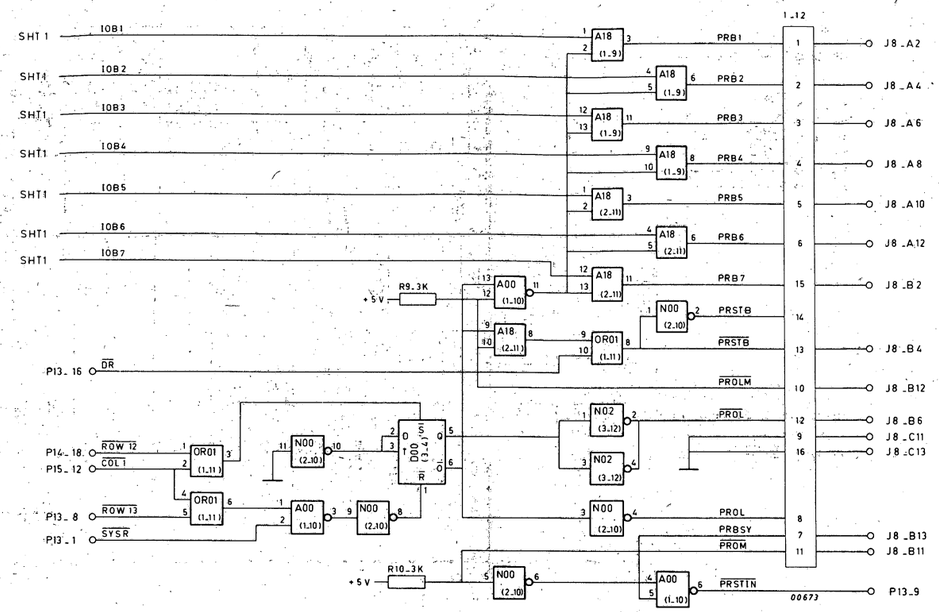

Figure 3-10-3 Parallel Printer Option

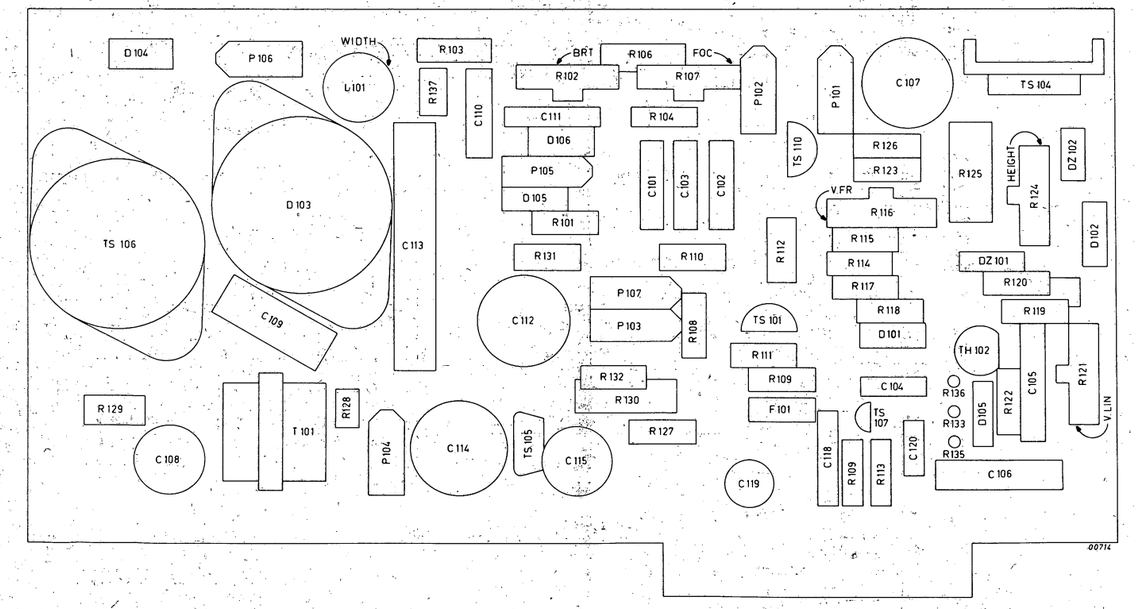

Figure 3-11 Component Layout Monitor Control Board

Chapter IV: Parts Catalogue

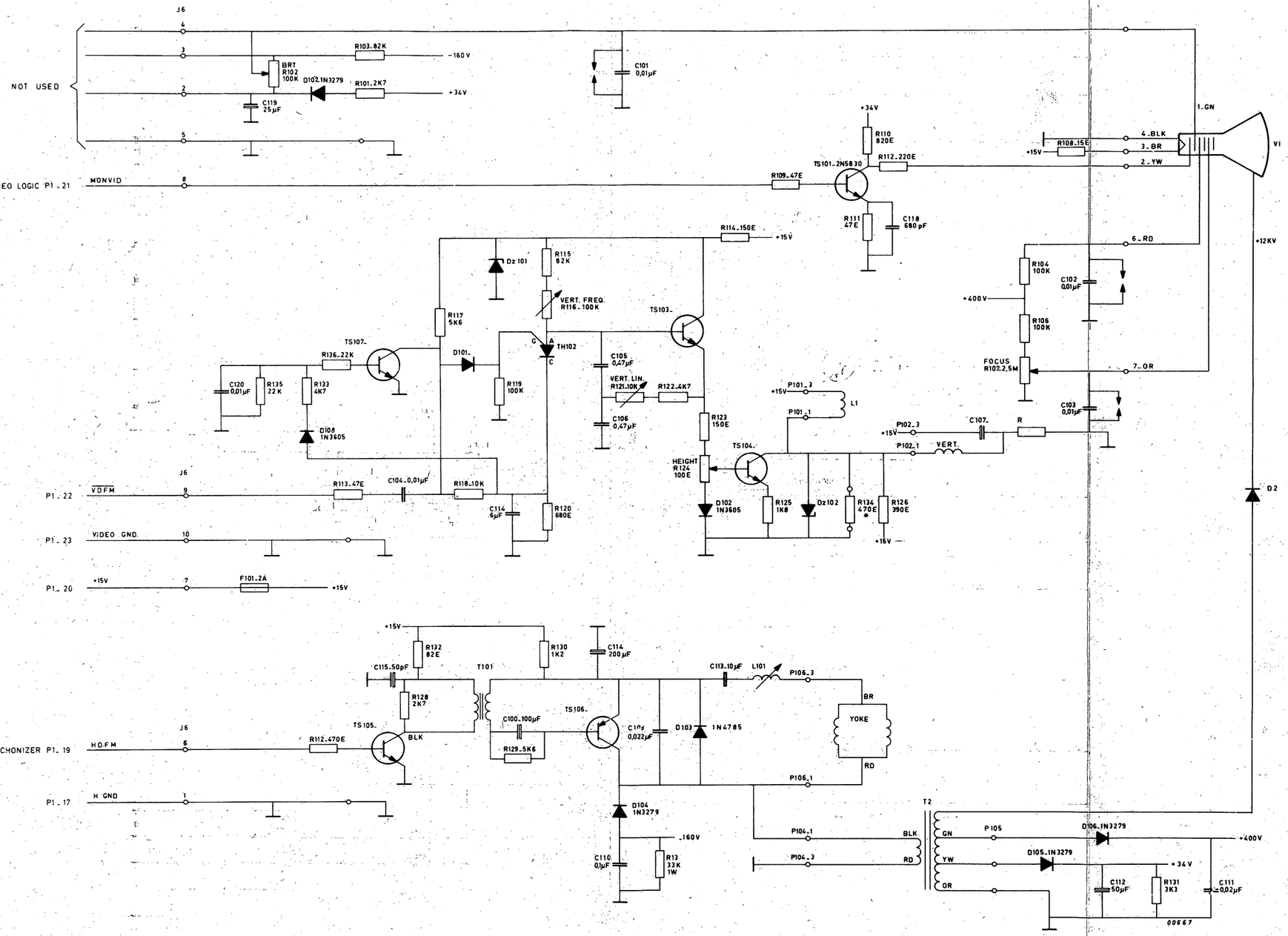

NOTE:
UNLESS OTHERWISE SPECIFIED RESISTORS ARE 1/2W 5%.
* ONLY USED WITH 24 ROW VERSION

Figure 3-12 Monitor Control Board Electronic Diagram

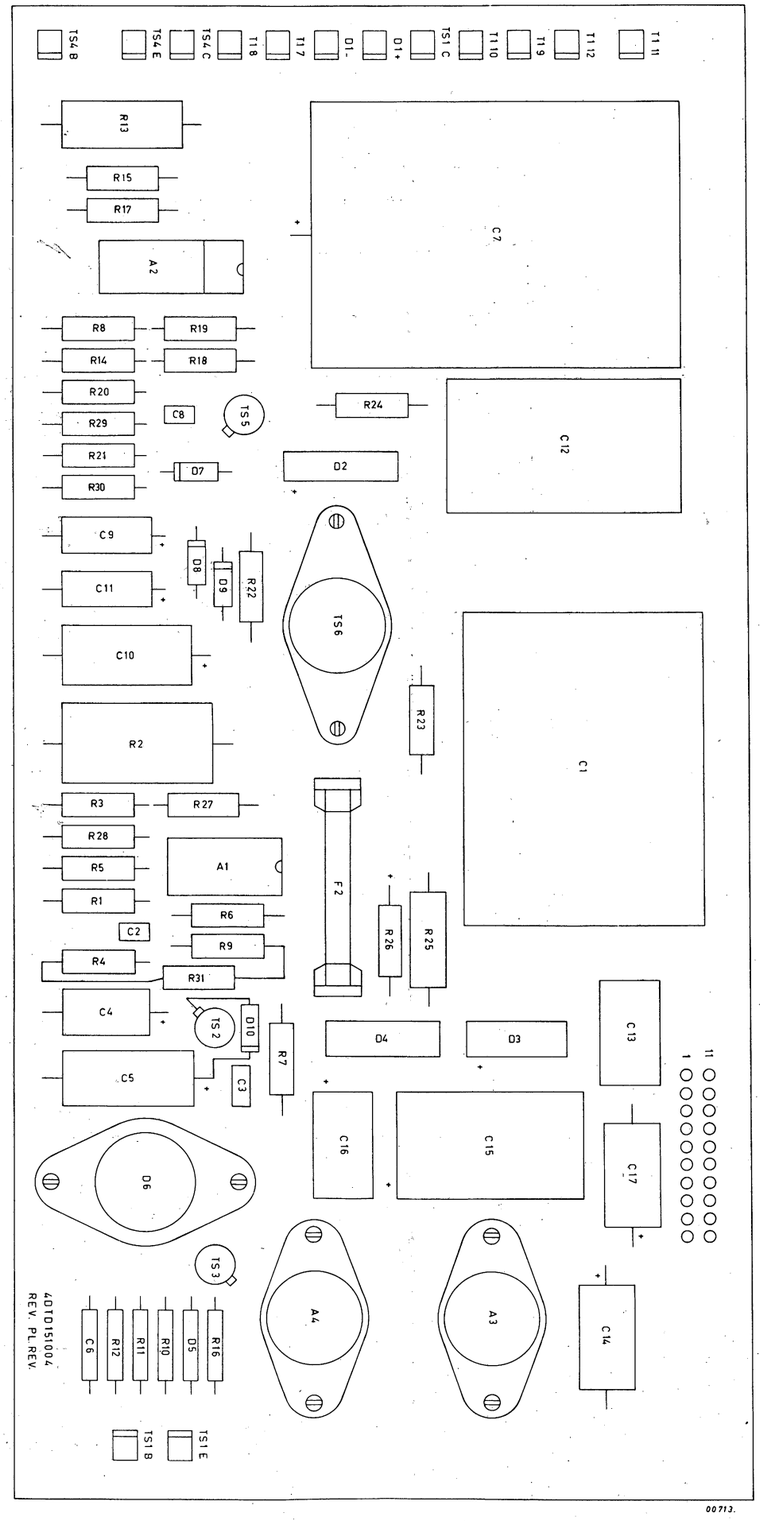

Figure 3-13 Power Supply Component Layout

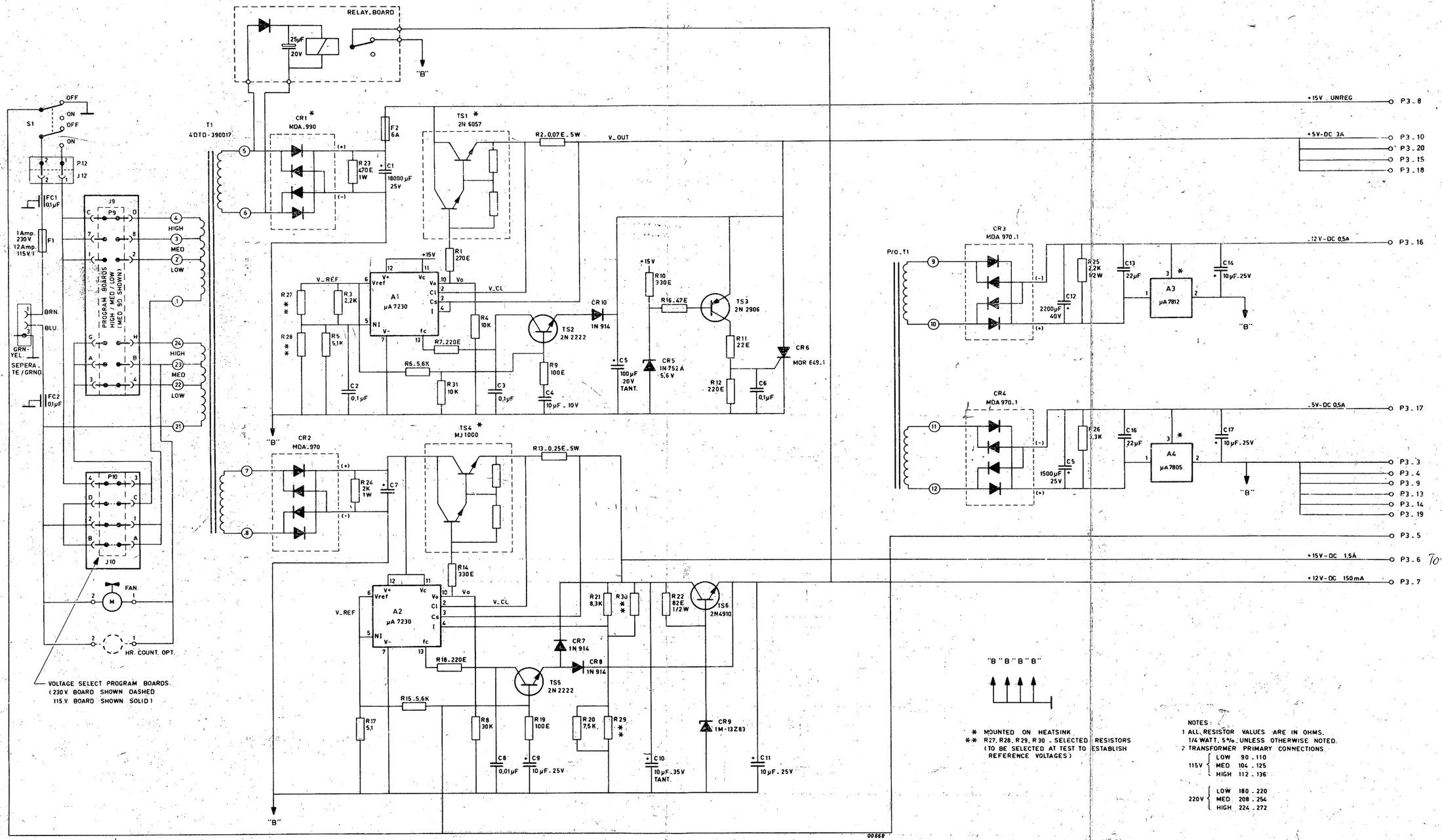

Figure 3-14 Power Supply Electronic Diagram

4-1 MONITOR

4.1.1 monitor complete

pos.	code number	description
AA	5322 395 34021	VDU-H1200
AB	5322 466 74042	non glare faceplate
AC	5322 276 14274	keyb. sw. half/full
AD	5322 276 14273	keyb. sw. H/L rate
AE	5322 276 14275	keyb. sw. TPWR/TTY
AF	5322 276 14276	keyb. sw. OL/OFL
AG	5322 277 14147	on/off switch
AH	5322 456 34206	text-strip (P2740)

assy: 180
display

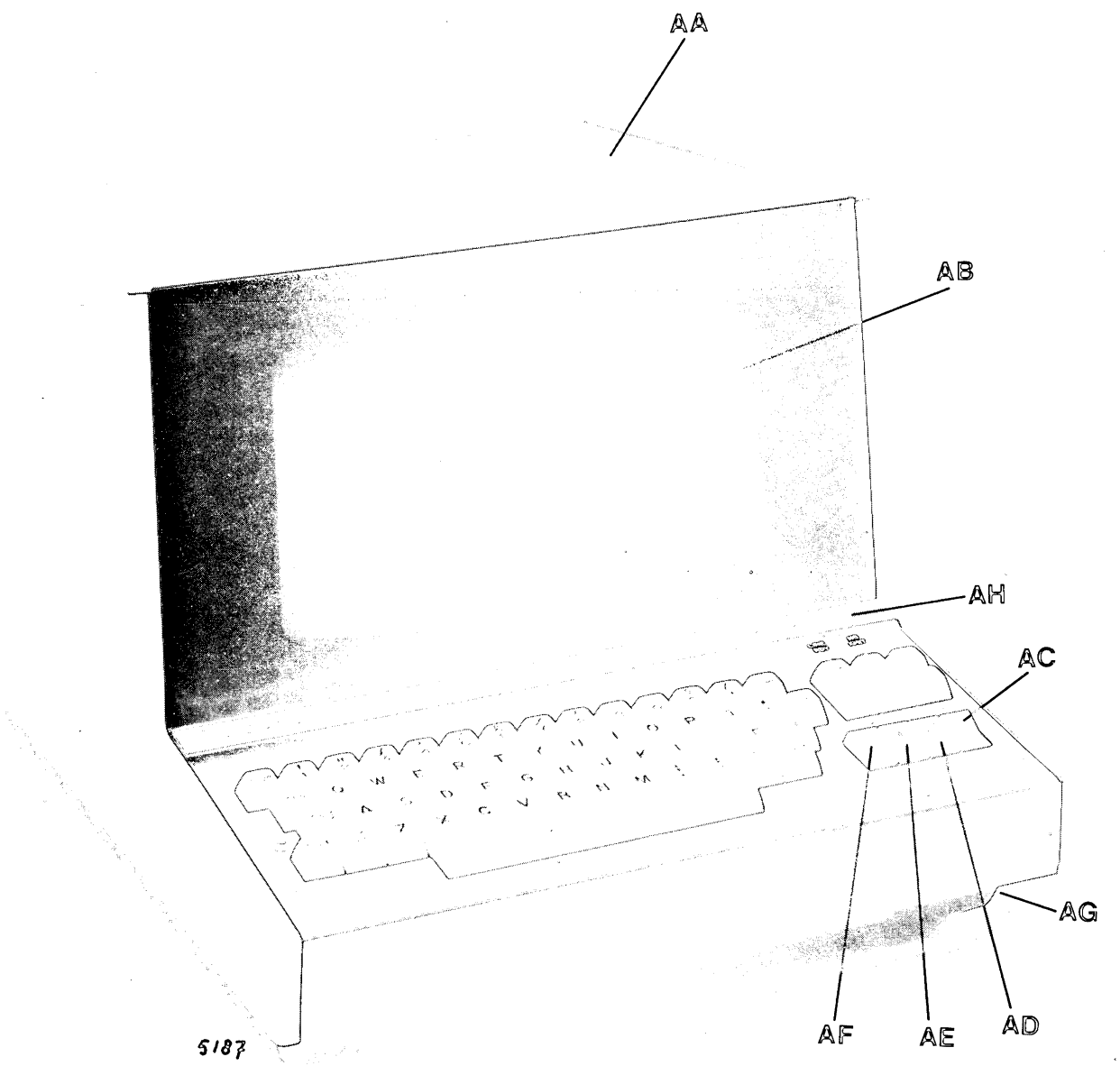

4.1.2 rear view

pos.	code number	description
AA	5322 131 24035	CRT 12"
AB	5322 150 14018	deflection yoke
AC	5322 130 54054	bridge rectifier MDA-990-1
AD	5322 361 14073	Fan
	5322 216 25006	PCB Bim
AF	5322 218 74448	Mercury relay assy
AG	5322 417 24036	nut + screw

assy: 180
display

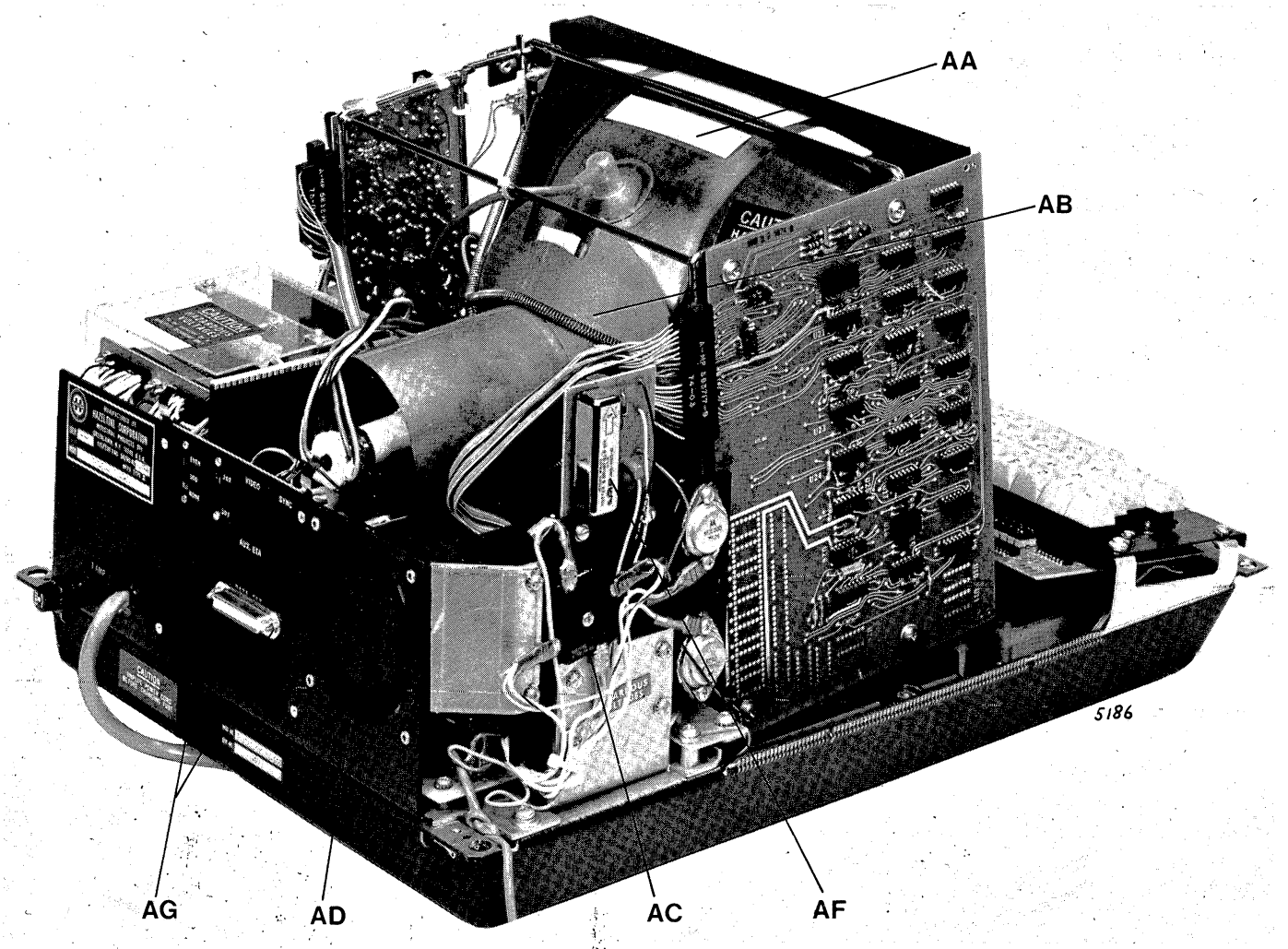

4.1.3 front view

pos.	code number	description
AA	5322 130 34297	voltage reg. IN758
AB	5322 253 44011	fuse (LTF)
AC	5322 121 44134	eichhoff filter 2 x 2A
AD	5322 216 24736	monitor board
AE	5322 146 14111	transf. hor. driv. MTL
AF	5322 156 14052	coil, width (MTL)
AG	5322 134 44158	indicator keyb.
AH	5322 140 14014	transf. high. voltage
AI	5322 150 54001	transf. vertical
AK	5322 134 44157	indicator on/off
AL	5322 209 85219	IC encoder
AM	5322 216 24738	keyb. logic.
AN	5322 209 85437	co. ship. qw. univers.
AO	5322 276 14302	keyswitch
AP	5322 276 14303	keyswitch
AQ	5322 276 14304	keyswitch

assy: 180
display

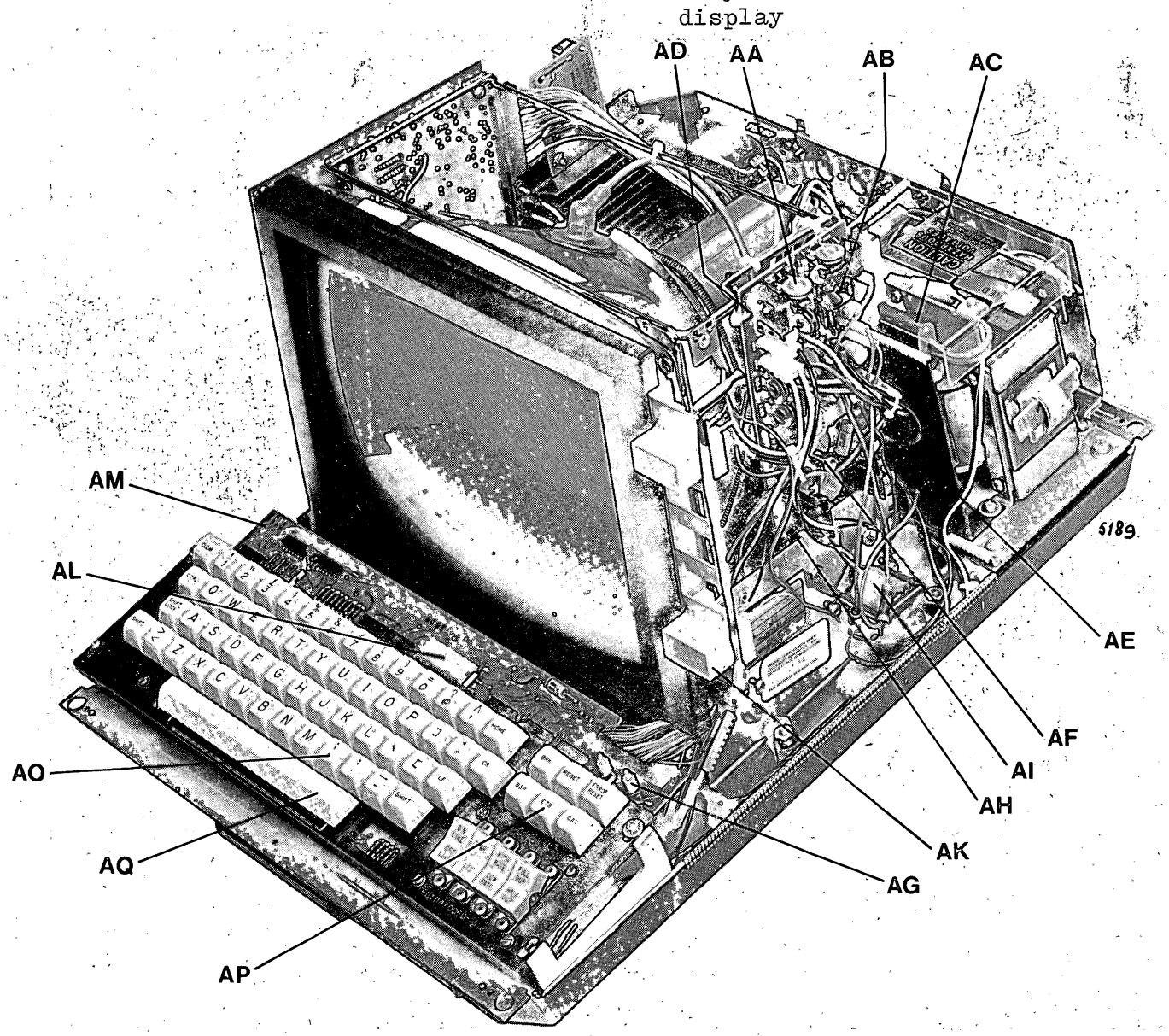

4.1.4 power supply assembly

pos.	code number	description
AA	5322 216 24737	ps. regulation board
AB	5322 124 24169	capacitor
AC	5322 999 00190	fuse 6A
AD	5322 124 24168	capacitor
AE	5322 124 24172	capacitor
AF	5322 124 24171	capacitor
AG	5322 277 24046	switch
AH	5322 146 24131	transformer p.s.
AI	5322 253 44004	fuse 1A 1/4" x 1 1/4"
	5322 253 24006	fuse 2A-110V
AK	5322 256 44003	fuse holder

electronic units
assy: 610
power supply

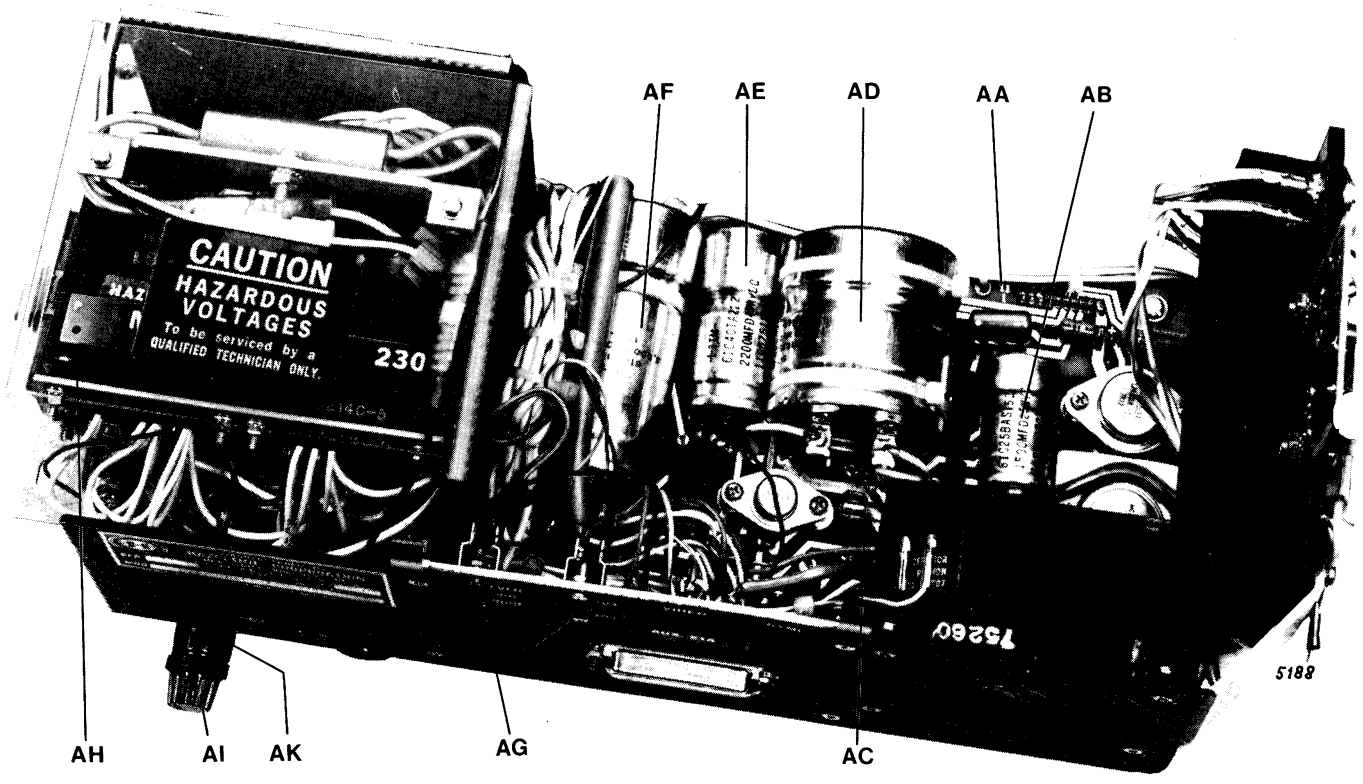

4.1.5 miscellaneous

	code number	description
IC's		
	5322 209 84036	SN7417N
	5322 298 80148	SN7404N
	5322 209 84165	SN7474N
	5322 209 84513	SN7432N
	5322 209 84528	SN7400N
	5322 209 84529	SN7403N
	5322 209 80151	SN7408N
	5322 209 84017	SN74121N
	5322 209 84899	U6A7723393
	5322 209 85498	U6J7813293-LM340-12
transistors		
	5322 130 44513	2N6057
	5322 130 44514	MJ1000
	5322 130 44502	2N2906
	5322 130 40221	2N2222
	5322 130 44565	2N4910
	5322 130 44564	MCR649P-1
	5322 130 44566	2N5830
	5322 130 44478	2N6027
	5322 130 44563	MPSA14
	5322 130 44607	MJE3055
	5322 130 44562	MPS-U05
	5322 130 44567	SP2597/MP3731/B1182
	5322 130 40732	2N4124
	5322 130 44561	U6J7805393
diodes		
	5322 130 54057	MDA970-1
	5322 130 30009	1N914
	5322 130 30594	BAV10
	5322 130 30671	1N4785
	5322 130 30671	1N3279/AY102
	5322 130 34543	VR56
zenerdiodes		
	5322 130 34385	1N752A
	5322 130 34544	1M13ZS3
resistors		
	5322 101 14141	201 var(CTS) 100K 1/8W
	5322 101 14137	BBRCR107 var(MTL)
	5322 101 14138	BBRCR121 var(MTL)
	5322 101 14139	BBRCR124 var(MTL)
various parts		
	5322 310 34072	raster mask
	5322 240 34005	loudspeaker
	5322 265 50038	connector 25 poles
	5322 268 44123	cover
	5322 322 44014	cable 14x0,14
	5322 321 24411	interface cable assy
	5222 321 24433	interface cable assy (only for Germany)
	5322 321 24276	cable V24 assy
	5322 323 54036	cable V24

4.1.6 miscellaneous for Bim and Bim-connecting

	code number	description
diodes		
	5322 130 34321	1M4151
transistors		
	5322 130 40407	2N2369
IC's		
	5322 209 84452	KA709C
	5322 209 84017	SN74121N
	5322 209 84528	SN7400N
	5322 209 85413	MTC2
	5322 209 85315	volt. conv. VA12-12
zenerdiodes		
	4822 130 30861	ZPD7,5
led		
	4822 130 30922	red
various parts		
	5322 158 34073	coil 11/7
	5322 267 74025	connector block 20 poles
	5322 268 24041	contact bush
	5322 462 44161	polarizing plug
	5322 323 54017	flat cable 19 x 0,14
	5322 267 60064	connector 25 poles bush
	5322 265 50038	connector 25 poles pin
	5322 322 44017	cable 6 x 0,14
	5322 268 44101	cover
	4822 264 30062	connector 2 poles pin
	5322 264 30062	cable Bim
	5322 321 24412	plug plate
	5322 218 74419	cable p3
	5322 321 24421	cable H1200
	5322 255 44214	IC mounting
	5322 255 44107	IC mounting
	5322 321 24494	Cable Bim
	5322 264 54052	connector 8 poles pin
	5322 268 44123	cover
	5322 290 34001	eye cable tag
	5322 322 44004	cable 14 x 0,14

4-2 LOGIC BOARD 1

pos.	code number	description
AA	5322 216 24741	logic board 1
AB	5322 242 74097	crystal 21.732480

electronic units
assy: 620
PCB's

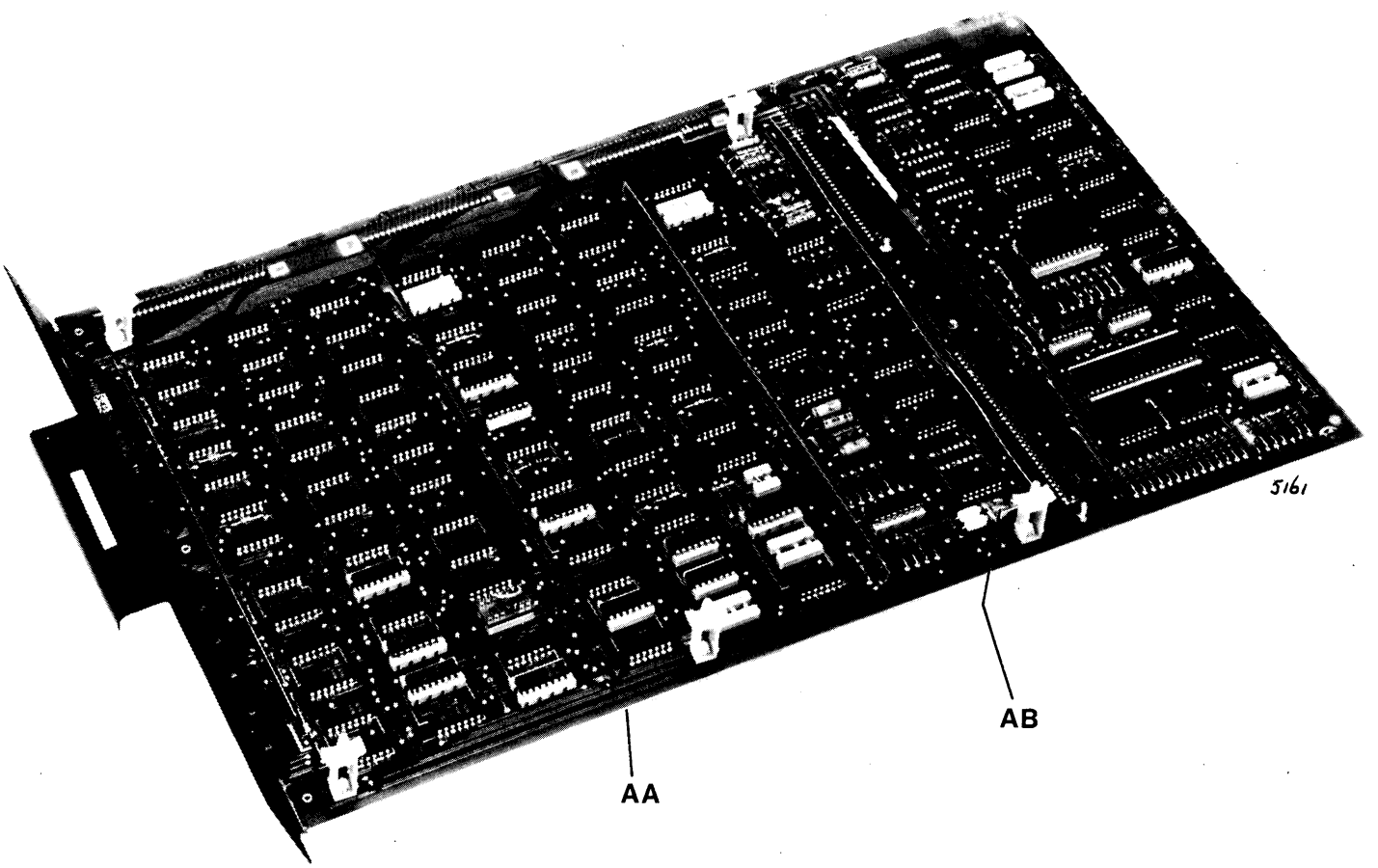

4.2.1 miscellaneous

	code number	description
IC's		
	5322 209 80148	SN7404N
	5322 209 84165	SN7474N
	5322 209 84513	SN7432N
	5322 209 84528	SN7400N
	5322 209 80151	SN7408N
	5322 209 80228	SN74H00N
	5322 209 85221	SN74H01N
	5322 209 84227	SN7402N
	5322 209 84318	SN74H04N
	5322 209 84475	SN74S04N
	5322 209 84035	SN7416N
	5322 209 85222	SN74H08N
	5322 209 84288	SN74H10N
	5322 209 80133	SN74H11N
	5322 209 84515	SN7414N
	5322 209 84195	SN7437N
	5322 209 80142	SN7442N
	5322 209 84048	SN74H74N
	5322 209 80072	SN7490N
	5322 209 84545	SN74154N
	5322 209 84298	SN74163N
	5322 209 84302	SN74174N
	5322 209 84019	SN74177N
	5322 209 84023	SN74107N
	5322 209 84307	MC1488L
	5322 209 84308	MC1489L
	5322 209 85217	COM2502
	5322 209 84671	9602
transistors		
	5322 130 40221	2N2222
	5322 130 40218	2N2907
diodes		
	5322 130 30009	1N914
	5322 130 30197	1N4001

4-3 LOGIC BOARD 2

pos.	code number	description
AA	5322 209 84939	char. gen. GER
	5322 209 84941	char. gen. GB
	5322 209 84942	char. gen. FR
	5322 209 84943	char. gen. SPAIN
	5322 209 84944	char. gen. ITALY
	5322 209 84945	char. gen. SW
	5322 209 84946	char. gen. DENM
	5322 209 84947	char. gen. YUG
	5322 209 85436	char. gen. USA
AB	5322 216 24739	logic board 2

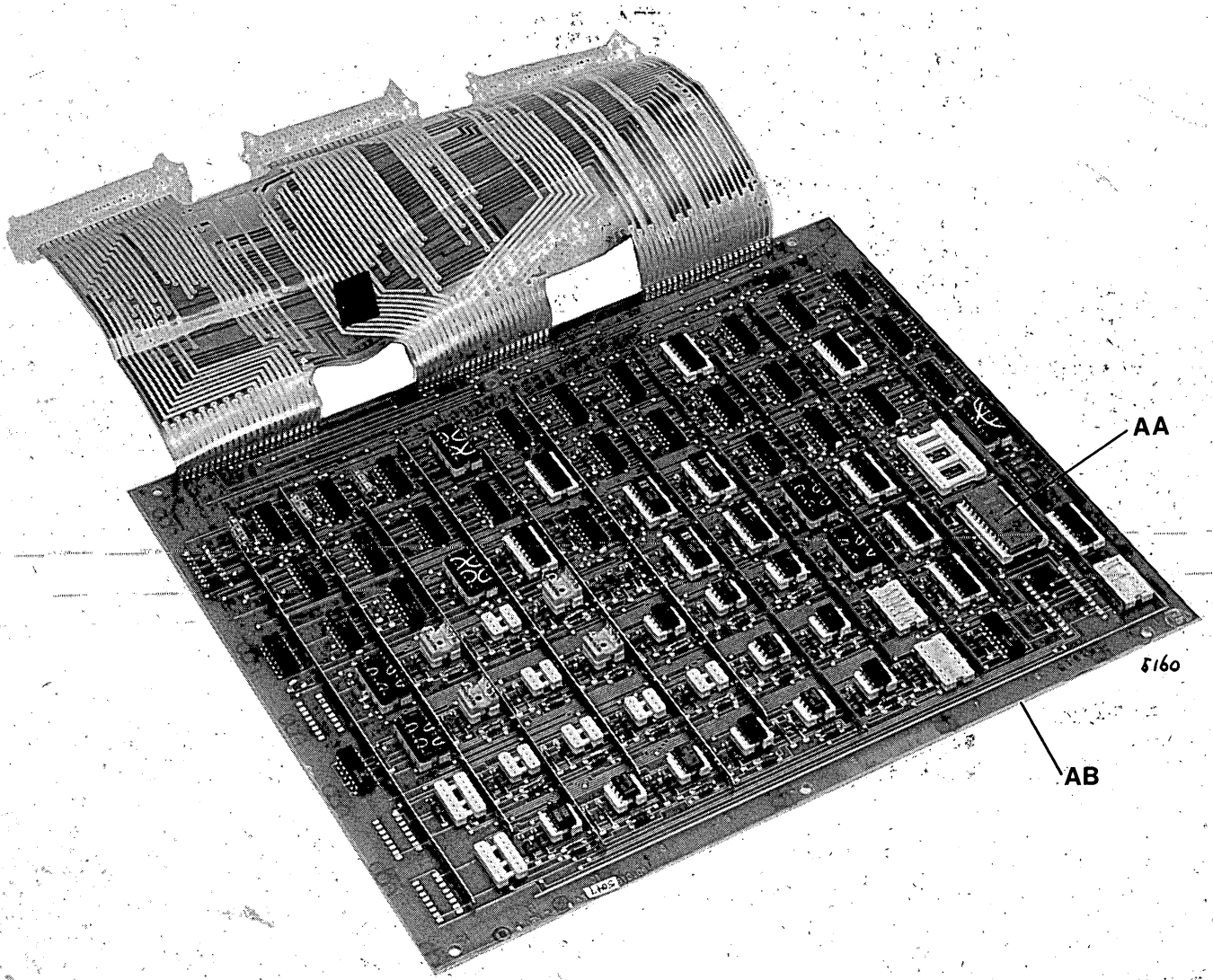

electronic units
assy: 620
PCB's

4.3.1 miscellaneous

	code number	description
IC's		
	5322 209 84165	SN7474N
	5322 209 84513	SN7432N
	5322 209 80151	SN7408N
	5322 209 80228	SN74H00N
	5322 209 84227	SN7402N
	5322 209 84318	SN74H04N
	5322 209 85222	SN74H08N
	5322 209 84288	SN74H10N
	5322 209 80133	SN74H11N
	5322 209 84048	SN74H74N
	5322 209 84298	SN74163N
	5322 209 84871	SN7422N
	5322 209 84296	SN74157N
	5322 209 84299	SN74166N
	5322 209 84303	SN74175N
	5322 209 85218	MH0026CN
	5322 209 85215	2513
	5322 209 85214	2503
	5322 209 84874	2532B
diodes		
	5322 130 30009	1N914
zenerdiodes		
	5322 130 34105	1N4730

4-4 PARTS PRESENT IN STANDARD KEYBOARD P2740

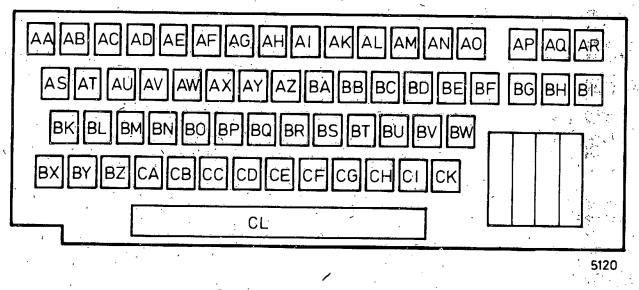

pos.	code number	description
AA	5322 414 25778	keytop CLEAR
AB	5322 414 25782	keytop 1/!
AC	5322 414 25783	keytop 2/"
AE	5322 414 25785	keytop 4/$
AF	5322 414 25786	keytop 5/%
AG	5322 414 25787	keytop 6/&
AH	5322 414 25788	keytop 7/'
AI	5322 414 25789	keytop 8/(
AK	5322 414 25791	keytop 9/)
AL	5322 414 25813	keytop 0/=
AN	5322 414 25814	keytop |/^
AO	5322 414 25777	keytop HOME
AP	5322 414 25821	keytop BRK
AQ	5322 414 25793	keytop RESET
AR	5322 414 25794	keytop RESET/ERROR
AS	5322 414 25775	keytop CTRL
AV	5322 414 25751	keytop E
AW	5322 414 25765	keytop R
AX	5322 414 25767	keytop T
AZ	5322 414 25768	keytop U
BA	5322 414 25755	keytop I
BB	5322 414 25762	keytop O
BC	5322 414 25763	keytop P
BE	5322 414 25815	keytop +/*
BF	5322 414 25781	keytop CR
BG	5322 414 25822	keytop BSP
BH	5322 414 25823	keytop ETB
BI	5322 414 25824	keytop CAN
BK	5322 414 25792	keytop LOCK/SHIFT
BM	5322 414 25766	keytop S
BN	5322 414 25749	keytop D
BO	5322 414 25752	keytop F
BP	5322 414 25753	keytop G
BQ	5322 414 25754	keyyop H
BR	5322 414 25756	keytop J

pos.	code number	description
BS	5322 414 25757	keytop K
BT	5322 414 25758	keytop L
BW	5322 414 25779	keytop LF
BX	5322 414 25776	keytop SHIFT
BY	5322 414 25816	keytop </>
CA	5322 414 25772	keytop X
CB	5322 414 25748	keytop C
CC	5322 414 25769	keytop V
CD	5322 414 25747	keytop B
CE	5322 414 25761	keytop N
CF	5322 414 25759	keytop M
CG	5322 414 25817	keytop ,/;
CH	5322 414 25818	keytop ./:
CI	5322 414 25819	keytop -/--
CK	5322 414 25776	keytop SHIFT
	5322 414 25745	keytop blanc

4.4.1 survey of key-tops for P2740

parts present in keyboard for Germany
national variant for Austria, Luxembourg, Switzerland

pos.	code number		description
AD	5322 414 25784	✓	keytop 3/#
AM	5322 414 25796	×	keytop $/?
AT	5322 414 25764		keytop Q
AU	5322 414 25771		keytop W
AY	5322 414 25774		keytop Z
BD	5322 414 25799	✓	keytop Ü
BL	5322 414 25746		keytop A
BU	5322 414 25801	✓	keytop Ö
BV	5322 414 25802	×	keytop Ä
BZ	5322 414 25773		keytop Y

parts present in keyboard for Great-Britain
national variant for Netherlands, New Zealand, South Africa, Belgium

pos.	code number	description
AD	5322 414 25795	keytop 3/
AM	5322 414 25797	keytop @/?
AT	5322 414 25764	keytop Q
AU	5322 414 25771	keytop W
AY	5322 414 25773	keytop Y
BD	5322 414 25803	keytop]
BL	5322 414 25746	keytop A
BU	5322 414 25804	keytop \
BV	5322 414 25803	keytop [
BZ	5322 414 25774	keytop Z

parts present in keyboard for Yugoslavia

pos.	code number	description
AD	5322 414 25795	keytop 3/
AM	5322 414 25798	keytop Ž/?
AT	5322 414 25764	keytop Q
AU	5322 414 25771	keytop W
AY	5322 414 25773	keytop Y
BD	5322 414 25809	keytop Š
BL	5322 414 25746	keytop A
BU	5322 414 25811	keytop Č
BV	5322 414 25812	keytop Ć
BZ	5322 414 25774	keytop Z

parts present in keyboard for U.S.A.
national variant for Canada, Australia

pos.	code number	description
AD	5322 414 25784	keytop 3/#
AM	5322 414 25797	keytop @/?
AT	5322 414 25764	keytop Q
AU	5322 414 25771	keytop W
AY	5322 414 25773	keytop Y
BD	5322 414 25803	keytop]
BL	5322 414 25746	keytop A
BU	5322 414 25804	keytop \
BV	5322 414 25803	keytop [
BZ	5322 414 25774	keytop Z

parts present in keyboard for France
national variant for Switzerland, Luxembourg, Belgium

pos.	code number	description
AD	5322 414 25795	keytop 3/
AM	5322 414 25726	keytop à/?
AT	5322 414 25746	keytop A
AU	5322 414 25774	keytop Z
AY	5322 414 25773	keytop Y
BD	5322 414 25805	keytop §
BL	5322 414 25764	keytop Q
BH	5322 414 25806	keytop Ç
BV	5322 414 25807	keytop °
BZ	5322 414 25771	keytop W

parts present in keyboard for Spain
national variant for Mexico, Argentina, Venezuela

pos.	code number	description
AD	5322 414 25795	keytop 3/
AM	5322 414 25797	keytop @/?
AT	5322 414 25764	keytop Q
AU	5322 414 25771	keytop W
AY	5322 414 25773	keytop Y
BD	5322 414 25803	keytop]
BL	5322 414 25746	keytop A
BU	5322 414 25808	keytop Ñ
BV	5322 414 25803	keytop [
BZ	5322 414 25774	keytop Z

parts present in keyboard for Danmark
national variant for Norway

pos.	code number	description
AD	5322 414 25795	keytop 3/£
AM	5322 414 25797	keytop @/?
AT	5322 414 25764	keytop Q
AU	5322 414 25771	keytop W
AY	5322 414 25773	keytop Y
BD	5322 414 25703	keytop Å
BL	5322 414 25746	keytop A
BV	5322 414 25735	keytop Ø
BV	5322 414 25736	keytop Æ
BZ	5322 414 25774	keytop Z

parts present in keyboard for Sweden
national variant for Finland

pos.	code number	description
AD	5322 414 25784	keytop 3/#
AM	5322 414 27704	keytop É/?
AT	5322 414 25764	keytop Q
AU	5322 414 25771	keytop W
AY	5322 414 25773	keytop Y
BD	5322 414 25703	keytop Å
BL	5322 414 25746	keytop A
BU	5322 414 25801	keytop Ö
BV	5322 414 25802	keytop Ä
BZ	5322 414 25774	keytop Z

parts present in keyboard for Italy
national variant for Switzerland

pos.	code number	description
AD	5322 414 25795	keytop 3/£
AM	5322 414 25796	keytop §/?
AT	5322 414 25764	keytop Q
AU	5322 414 25771	keytop W
AY	5322 414 25773	keytop Y
BD	5322 414 25702	keytop É
BL	5322 414 25746	keytop A
BU	5322 414 25806	keytop Ç
BV	5322 414 25807	keytop °
BZ	5322 414 25774	keytop Z

parts present in keyboard for Portugal
national variant for Brasil

pos.	code number	description
AD	5322 414 25795	keytop 3/£
AM	5322 414 25797	keytop @/?
AT	5322 414 25764	keytop Q
AU	5322 414 25771	keytop W
AY	5322 414 25773	keytop Y
BD	5322 414 25737	keytop Õ
BL	5322 414 25746	keytop A
BU	5322 414 25806	keytop Ç
BV	5322 414 25738	keytop Ã
BZ	5322 414 25774	keytop Z

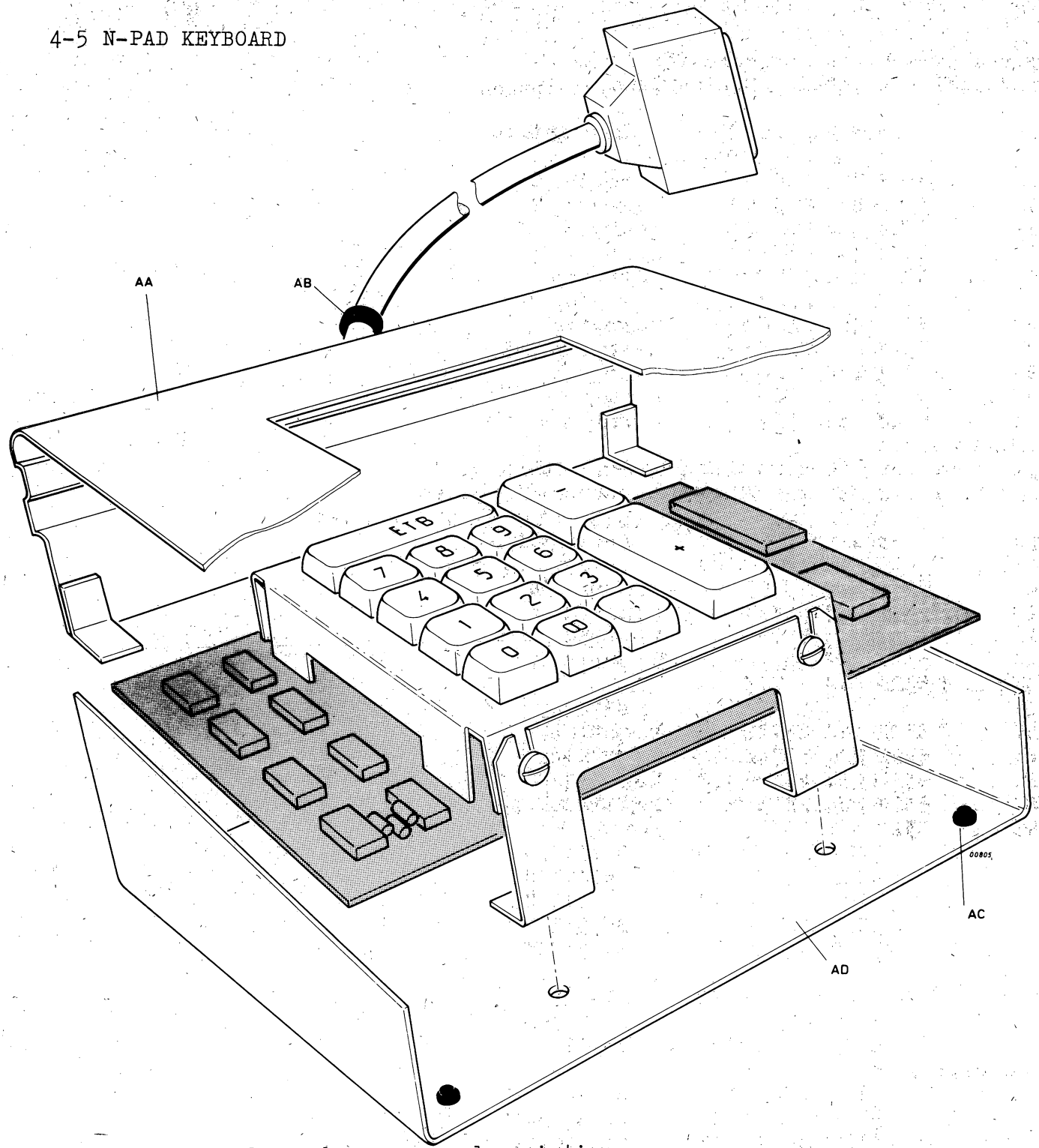

pos.	code number	description
AA	5322 447 84689	cover
AB	5322 325 64078	grommet
AC	5322 462 44321	buffer
AD	5322 447 84688	base plate
	5322 414 24884	keytop 1
	5322 414 24985	keytop 2
	5322 414 24986	keytop 3
	5322 414 24987	keytop 4
	5322 414 24991	keytop 5
	5322 414 24988	keytop 6

	code number	description
	5322 414 24989	keytop 7
	5322 414 24992	keytop 8
	5322 414 24993	keytop 9
	5322 414 24848	keytop 0
	5322 414 25004	keytop 00
	5322 414 25007	keytop -
	5322 414 25006	keytop +
	5322 414 25849	keytop ,
	5322 414 25847	keytop ETB
	5322 414 25846	keytop .
	5322	cable clamp
miscellaneous		
	5322 322 44004	cable 14 x 0,14
	5322 265 50038	connect 25 poles
	5322 267 74002	connector black 20 poles
	5322 268 24041	contact bush
	5322 462 44161	polarizing plug
	5322 268 44123	cover
		cable N-pad
	5322 290 44033	cable tag
logic board		
IC's	5322 209 84528	SN7400N
	5322 209 84529	SN7403N
	5322 209 84515	SN7414N
	5322 209 84165	SN7474N
	5322 209 85664	SN7488N/N-pad
	5322 209 84929	SN7493N
	5322 209 84341	SN74132N
	5322 209 84034	SN74150N
	5322 209 84809	SN75150N
	5322 209 84811	SN75154N
	5322 209 84992	AY-5-1013
	5322 209 84593	ERC1179A
	5322 209 84914	33102
various parts		
	5322 276 14178	key
	5322 414 25036	cover plate
	5322 265 64031	connector



Chapter V: Installation

5.1 PACKING AND UNPACKING

When handling the VDT always support it by the base plate otherwise damage to the covers may ensue. When packing the VDT ensure that there is no pressure on the screen.

5.2 INSTALLATION

5.2.1 Unit

Following the unpacking, place units to allow free air circulation around the top and base of the unit. The following procedure is recommended for installation,

a. Remove top cover by releasing slide fasteners located at the underside of each corner and lifting vertically upwards.

b. Visually inspect internal connections for loose or short circuits etc.

c. Check that the available voltage coincides with the voltage program board on the power supply assembly (If in doubt refer to the Technical Data on voltage levels). Replace top cover.

d. Connect power cord directly to a grounded power outlet.

e. If the unit has been brought from a significantly colder encironment it should be left for at least an hour before power on.

f. Turn power on by depressing ON/OFF rocker switch to the right. Type some characters on the screen(HALF DUPLEX/OFF/LINE) an adjust the contrast control for the best picture.

g. If the power indicator lamp isn't lit or the cursor doesn't appear in the home position (even after pressing the CLEAR key) reference should be made to the TROUBLE-SHOOTING procedures.

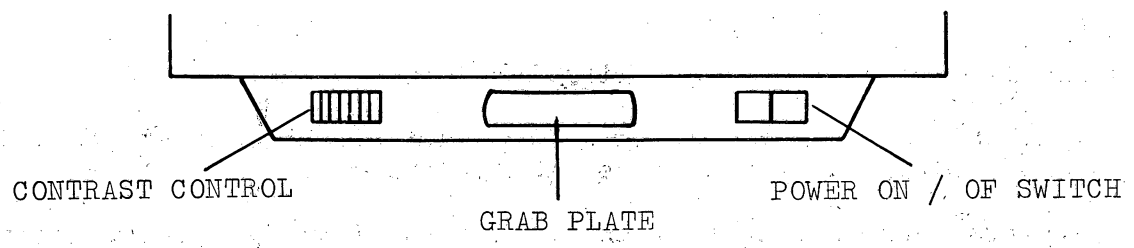

Figure 5-1

5.3 INSTALLATION OF THE OPTIONS

5.3.1 Baud Rate

Table 5.1

The preselection of Baud Rates is achieved by a combination of jumper wires soldered to headers which are located in positions 1-5, 2-6 and 4-6 of Logic Board 1. The following table gives the jumper wire combination to produce a particular Baud Rate.

Desired Baud rate	These jumpers must be in to place selected Baud Rate in the Low position on the Keyboard		These jumpers must be in to place selected Baud Rate in the High position on the Keyboard		These jumpers must be in whether selected Baud Rate is used in the High or Low position	
	Remove if Baud Rate Not Used		Remove if Baud Rate Not Used		Remove if Baud Rate Not Used	
	Low		High			
	FROM	TO	FROM	TO	FROM	TO
Baud 75	1-5-5	1-5-11	1-5-5	1-5-11	2-12-7	2-12-8
Baud 110	2-6-5	2-6-10	2-6-5	2-6-11	2-12-7 4-6-2 4-6-3	2-12-8 4-6-8 4-6-6
Baud 150	1-5-4	1-5-11	1-5-4	1-5-12		
Baud 200	1-5-3	1-5-11	1-5-3	1-5-12	1-5-6	1-5-9
Baud 300	1-5-2	1-5-13	1-5-2	1-5-14		
Baud 600	1-5-1	1-5-13	1-5-1	1-5-14		
Baud 900	2-6-7	2-6-8	2-6-7	2-6-9	1-5-7 4-6-1 4-6-3 4-6-4	1-5-8 4-6-8 4-6-7 4-6-5
Baud 1200	2-6-6	2-6-8	2-6-6	2-6-9		
Baud 1800	2-6-5	2-6-10	2-6-5	2-6-11	1-5-7 4-6-1 4-6-3 4-6-4	1-5-8 4-6-8 4-6-7 4-6-5
Baud 2400	2-6-4	2-6-10	2-6-4	2-6-11		
Baud 4800	2-6-3	2-6-12	2-6-3-	2-6-13		
Baud 9600	2-6-2	2-6-12	2-6-2	2-6-13		

Table 5.1

The installation procedure for a particular Baud Rate is:

a. Remove the top cover by releasing slide fasteners located at the underside of each corner and lifting vertically upwards.

b. Release Logic Board Assembly by unscrewing the four jack screws locating the two cable plugs to the rear of Logic Board 1.

c. Remove Logic Board Assembly by pulling the black grab plate forward with constant force. The front slide fasteners should be in the extreme outside position.

d. Demount Logic Board 2 from the assembly to uncover Logic Board 1.

e. Remove the jumper wires for the presently selected Baud Rate (given in the Baud Rate Chart).

f. Connect jumper wires for the new Baud Rate as defined in the Baud Rate Chart.

g. Replace Logic Board assembly.

5.3.2 Screen Capacity Extention

The kit of parts required is as follows

8 x IC	SN74157N
7 x IC	2503 or P1403A or MF1403AS
3 x IC	MH 0026CN or MMH 0026
2 x IC	SN7432N
1 x resistor	470E $\frac{1}{2}$ W
1 x resistor	2K7 $\frac{1}{2}$

The installation procedure is;

a. Unclip the Monitor Control Board from the right hand side of the Monitor Cage first removing all plugs and connectors. If plastic straps are used to locate the board to the cage these should be cut away.

b. On the Monitor Control Board (Figure 5-3)

REMOVE	ADD
resistor R126 680 $\frac{1}{2}$W	resistor R126 2K7 $\frac{1}{2}$W
	R134 47 $\frac{1}{2}$W

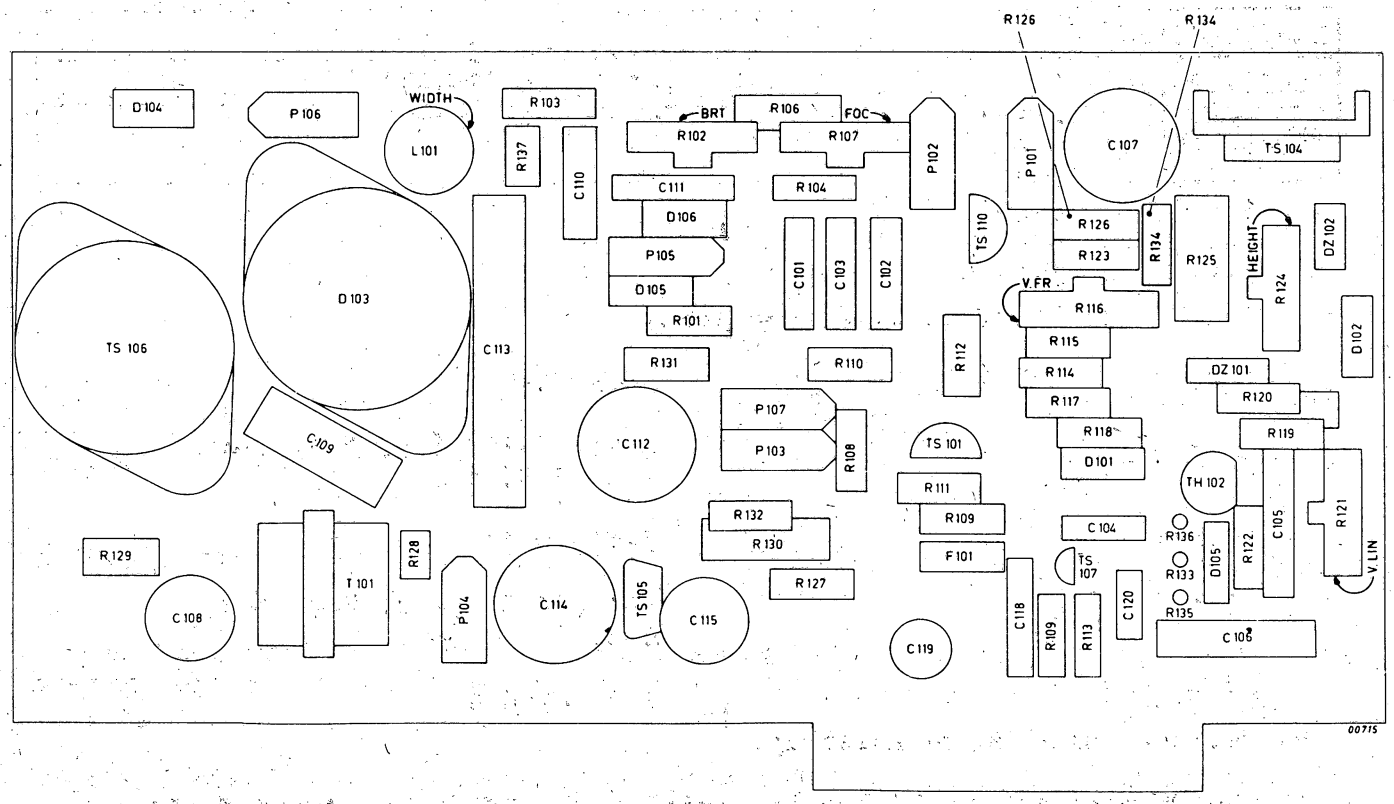

Figure 5-2

c. Replace Monitor Control Board.

d. Remove Logic Board Assembly by unscrewing the four jack screws locating the two cable plugs to the rear of Logic Board 1. Lift off the cable plugs and pull the assembly by the grab plate, with constant force, out of the front of the VDT.

e. Demount Logic Board 2 from Logic Board 1 to uncover components on each board.

REMOVE	ADD
JUMPER WIRES	
2-2-6 to 2-1-9	2-2-5 to 2-1-9
1-3-5 to 2-3-4	2-2-6 to 2-3-4
HEADER WIRES	
2-2-5 to 2-2-10	1-3-5 to 1-3- 6
3-3-1 to 3-3- 4	3-3-1 to 3-3-13
3-3-2 to 3-3-12	3-3-2 to 3-3-12
3-3-4 to 3-3-11	3-3-4 to 3-3-11

g. On Logic Board 2

REMOVE	ADD
HEADERS	
4-10, 4-8, 5-10, 5-8, 4-4, 4-11, 5-11, 1-8, 3-9, 4-1	
HEADER WIRES	
6-4-2 to 6-4-15	7-1-1 to 7-1-16
6-4-3 to 6-4-14	7-1-3 to 7-1-14
6-4-4 to 6-4-13	7-1-5 to 7-1-12
6-4-5 to 6-4-12	
6-4-6 to 6-4-11	
6-4-7 to 6-4-10	
6-4-8 to 6-4- 9	
7-1-1 to 7-1-16	

Add ICs to the following Locations,

TYPE	LOCATIONS
SN74157N	4-11, 5-11, 6-3, 5-4, 7-4 4-4, 3-9, 1-8
SN7432N	7-11, 6-11
2503	4-10, 4-8, 5-10, 5-7, 6-7, 6-8, 6-10, 5-8
MH0026CN	4-9,5-9,6-9

h. Replace Logic Board Assembly.

i. The TV picture should bow be tested (OFF LINE/HALF DUPLEX MODE) by typing some characters at the top and base of the screen. If required the picture should be adjusted for best picture quality.

5.3.3 Lower Case Character Displayed

The required installation procedure is;

a. Remove Logic Board Assembly (see SCREEN CAPACITY EXTENTION procedure step d).

b. Uncover components of Logic Board 2.

c. Add to Logic Board 2

24 pin socket :	at location 7-2 and solder to pcb
IC Character ROM:	to socket in location 7-2

d. Replace Logic Board Assembly.

5.3.4 Built in Modem Figures 5-3 through 5-5

The kit of parts required for the installation is as follows,

1 x PCB BIM
1 x PCB P3
1 x LINE H1200
1 x LINE P3
1 x PLUG ANGLE
4 x SCREW M4x8
2 x SCREW M3x6
4 x SCREW M4x16

The procedure is,

a. Remove the top cover of the VDT by releasing the slide fasteners located at each bottom corner and lifting vertically the cover.

b. Position the plug angle at the fan (Pos 1) and locate by four screws (M4x8) one at each corner.

c. Fix PCB P3 in the pcb support on the plug angle.

d. Remove plug P3 from the power supply pcb (Pos 2).

e. Insert Line P3 from socket J3 (Pos 2) to the lower socket on pcb P3(Pos 3) ensuring that the red wire is to the left hand side (looking from above).

f. Connect plug P3 into middle socket of pcb P3 (Pos 6)

g. Loosen the 25-pole cannon socket (Pos 4) mounted on the rear panel assembly.

h. Locate this socket to the plug angle (Pos 5), with two M3x6 screws, in the shaped cut out.

i. Mount pcb BIM on the lefthand side of the monitor cage by means of four screws (M4x16 with appropriate rings and washers). The 29-pole socket should be in the top corner facing the rear of the VDT.

j. Plug the 29-pole plug of line H1200 to the socket on pcb BIM

k. Connect voltage plug of line H1200 into top socket of pcb P3 (Pos 7)

l. Connect T-adapter socket of line H1200 to cannon plug on plug angle (Pos 5).

m. Connect V-24 pin socket to the EIA interface location on the rear panel assembly (Pos 4).

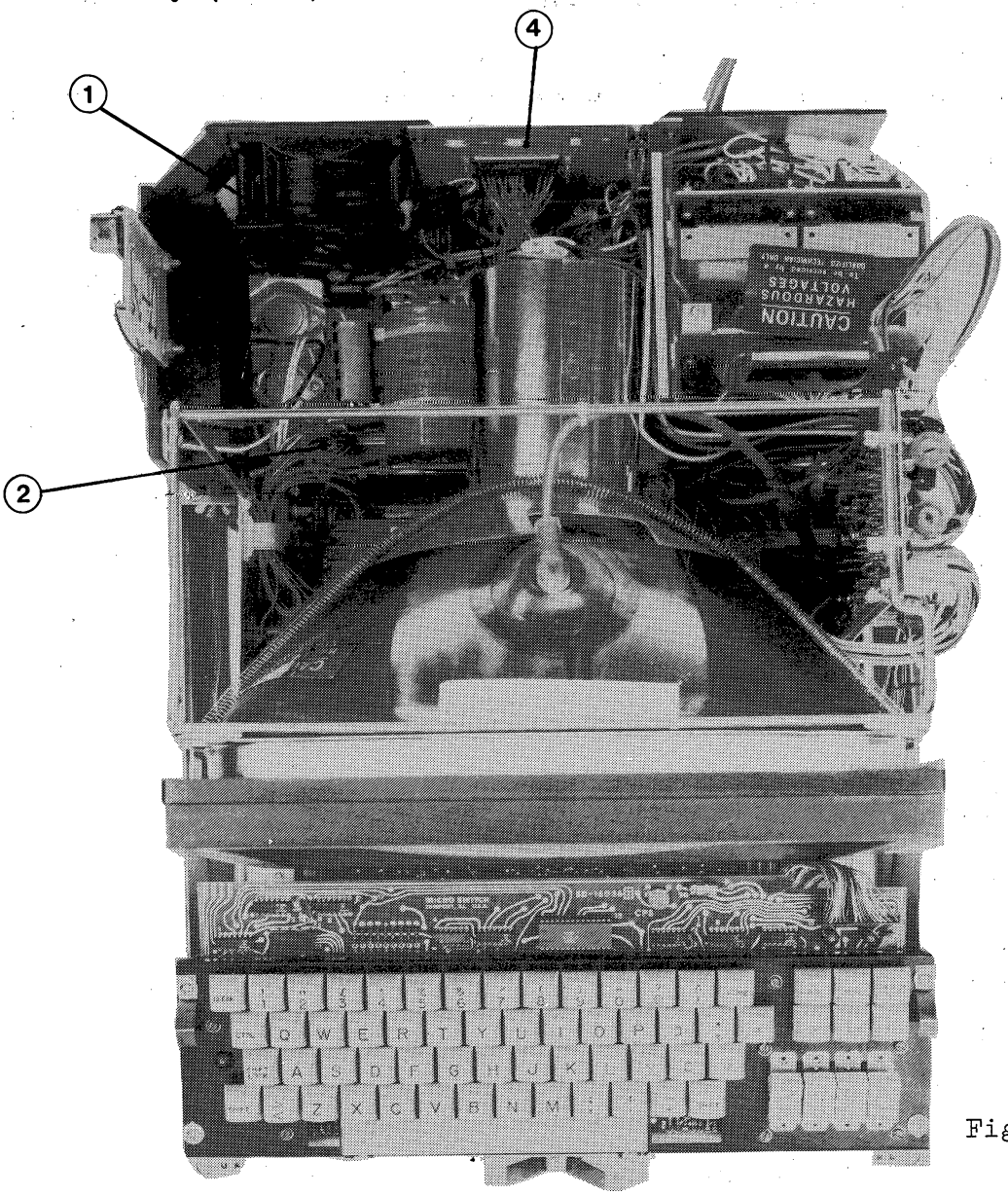

Figure 5-3

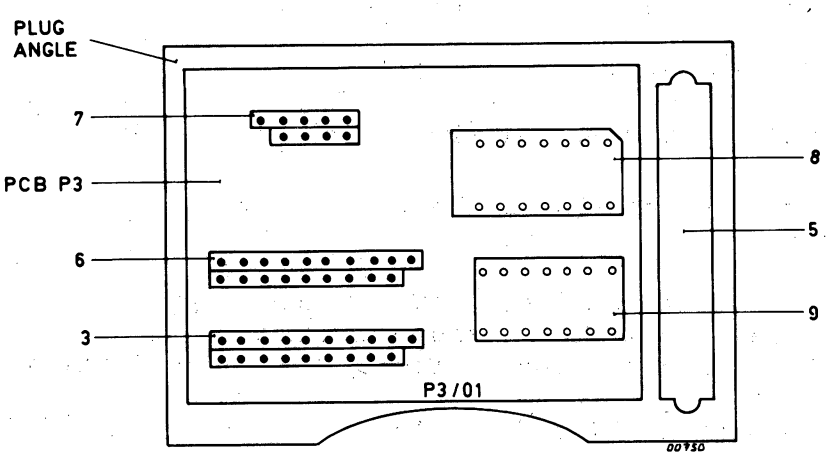

Figure 5-4

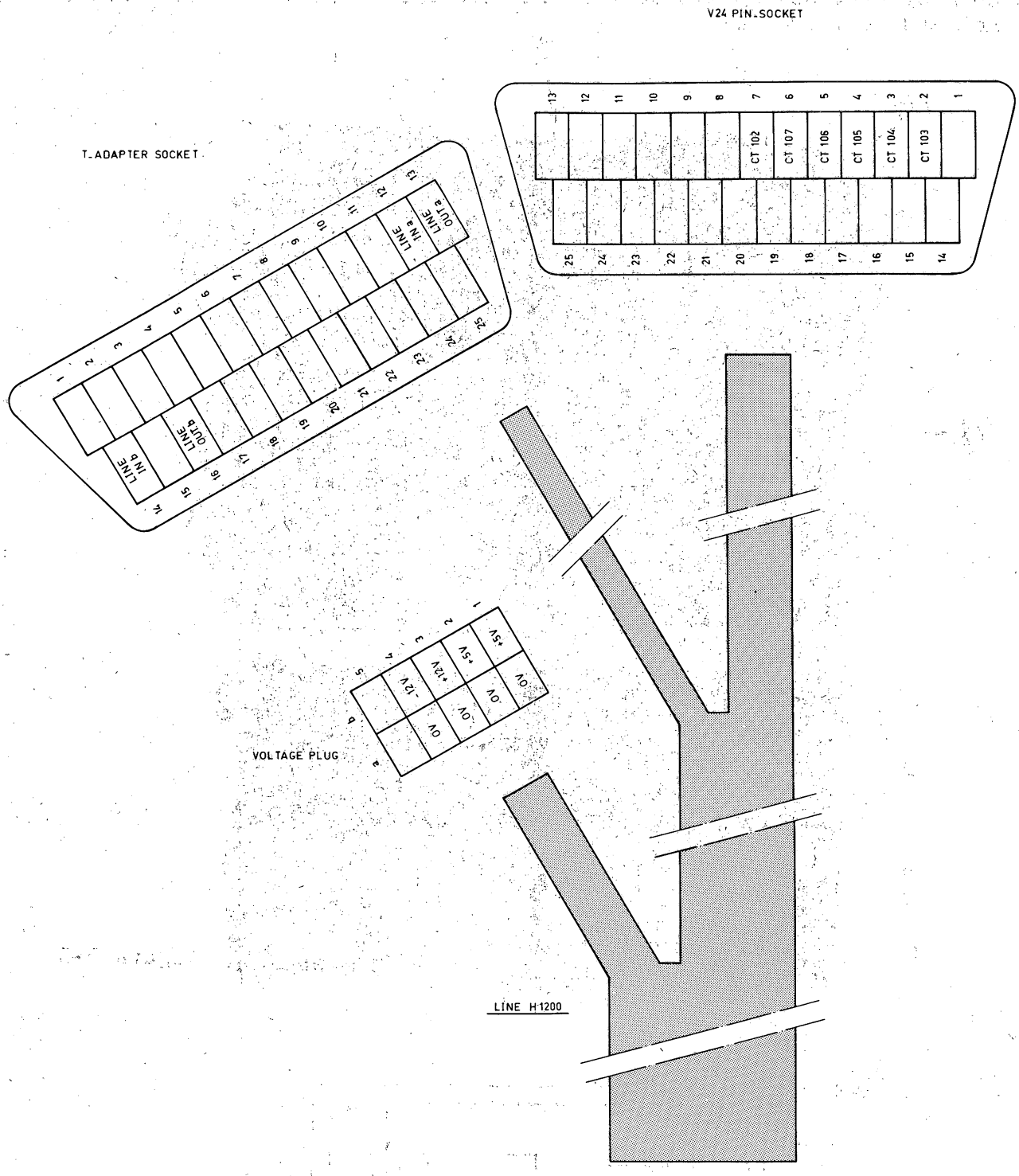

PCB BIM

15	14	13	12	11	10	9	8	7	6	5	4	3	2	1
	CT 103	CT 104	CT 105	CT 106	CT 107		LINE INb	LINE OUTb			-12V	+12V	+5V	+5V
CT 102	CT 102	CT 102	CT 102	CT 102	CT 102		LINE INa	LINE OUTa			0V	0V	0V	0V

00711

Figure 5-5

l. Connect T-adapter socket of line H1200 to cannon plug on plug angle (Pos 5).

m. Connect V-24 pin socket to the EIA interface location on the rear panel assembly (Pos 4).

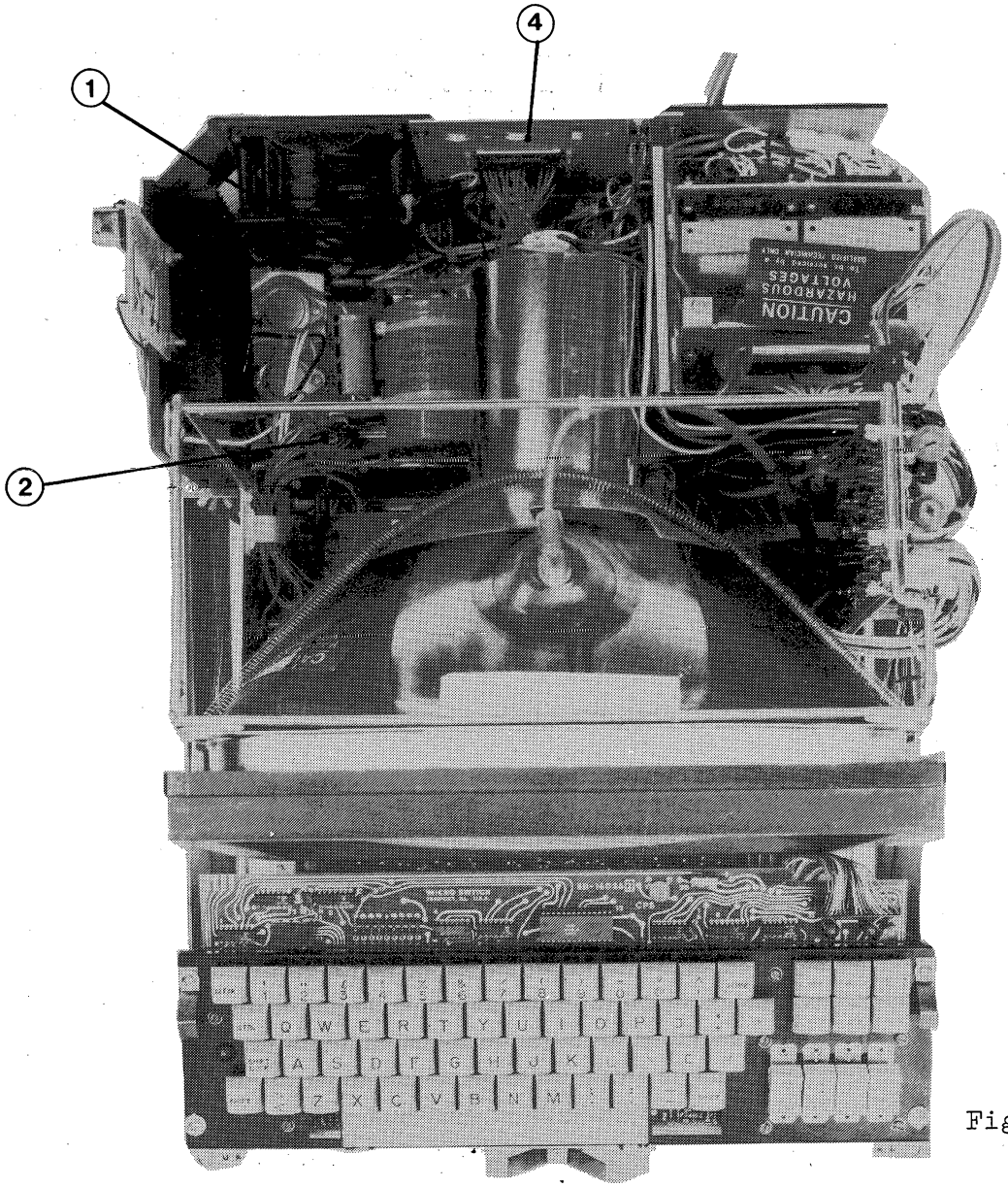

Figure 5-3

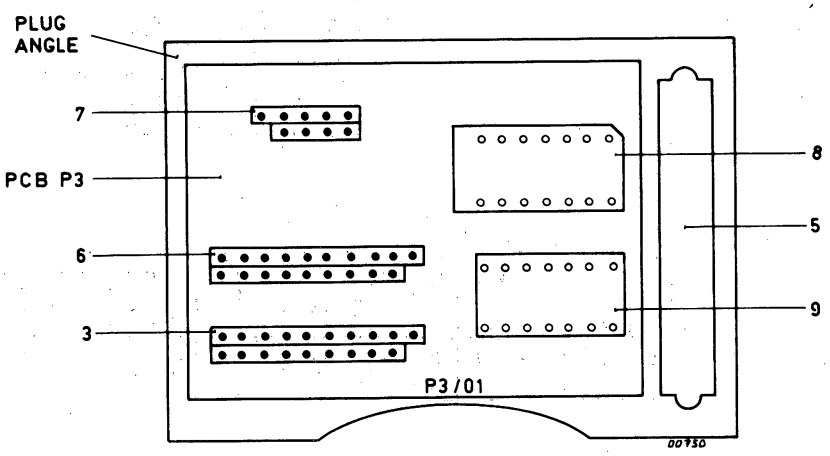

Figure 5-4

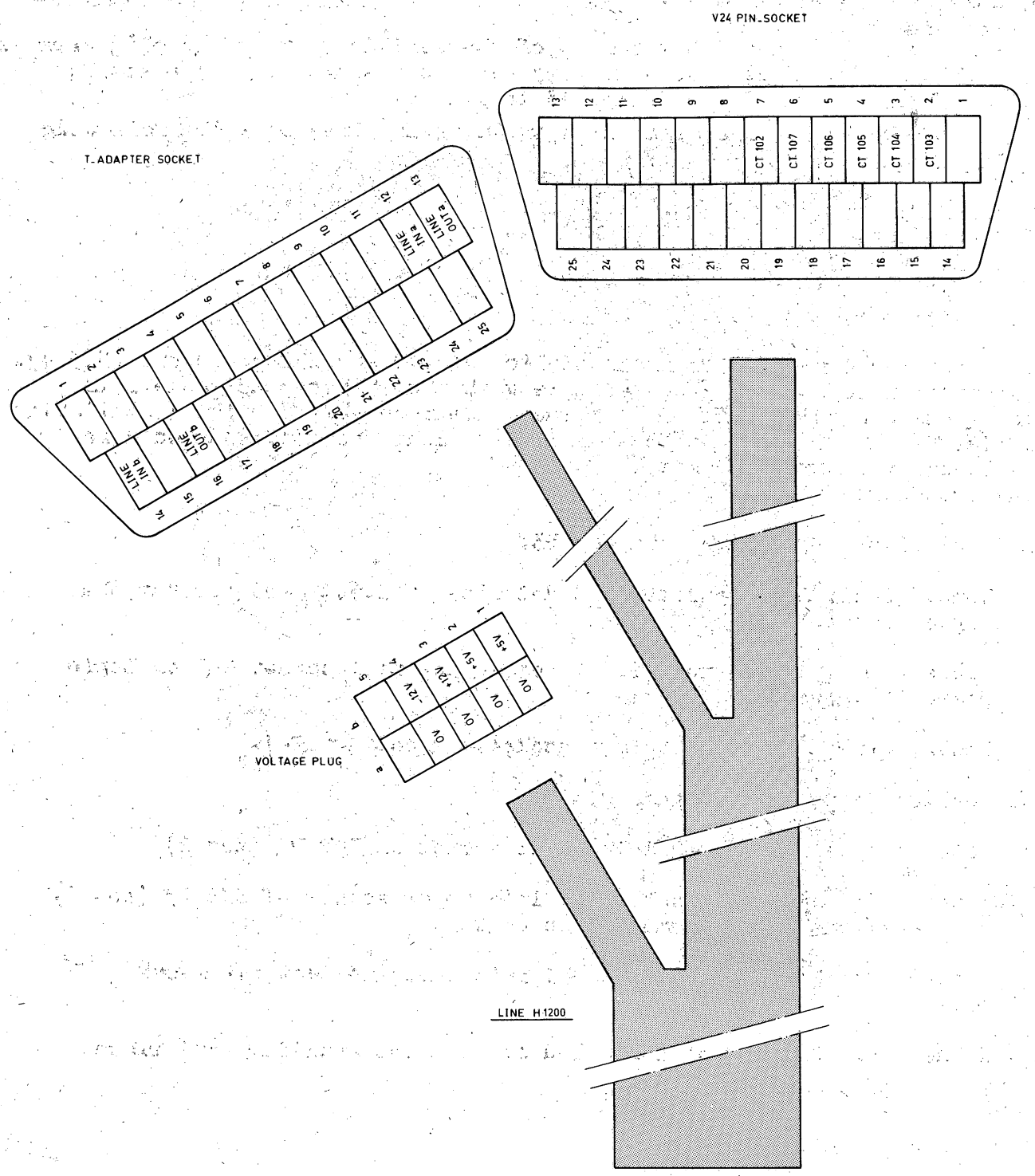

PCB BIM

15	14	13	12	11	10	9	8	7	6	5	4	3	2	1
	CT 103	CT 104	CT 105	CT 106	CT 107		LINE INb	LINE OUTb			-12V	+12V	+5V	+5V
CT 102	CT 102	CT 102	CT 102	CT 102	CT 102		LINE INa	LINE OUTa			0V	0V	0V	0V

00711

Figure 5-5

5.5.5 N-Pad Keyboard Figure 5-6

This option requires the VDT be installed with an auxiliary EIA connector on the rear panel assembly.

A check should be made that pin 16 of the auxiliary interface plug carries the +5V supply. If not the auxiliary cable connected to IC 3-8 pin 14 (Logic Board 1) should be connected to pin 16.

When the VDT is not installed with an Auxiliary interface the following kit is required.

1 x PCB P3/01
1 x Plug Angle
1 x Flat Flex Cable # 1
1 x Flat Flex Cable # 2
4 x Screws M4x8

The Plug Angle and PCB P3 are installed as per the BIM procedure (5.5.4). Two versions of PCB P3 are available with and without the sockets in positions 6 and 7 of figure 5.4. These are necessary for the installation of the N-Pad, hence a PCB P3 installed without the sockets should be replaced by one with sockets.
The procedure is,

a. Install the Plug Angle and PCB P3.

b. Remove Logic Board Assembly as detailed in 2.6.4. and demount the Logic Boards.

c. Place dummy in pin position 14 of socket at location 2-7 on Logic Board 1.

d. Insert plug of cable # 2 into socket at location 2-7.

e. Replace Logic Board assembly.

f. Place plug of cable # 2 into lower socket on PCB P3 (pos 2).

g. Insert 14 pin plug of cable # 1 into upper socket of PCB P3 (pos 1), pin locations 8 and 9 unsused on socket.

h. Connect cannon plug of cable # 1 into packpanel cut out above Data set.

i. N-Pad cable can now be installed as with the auxiliary interface.

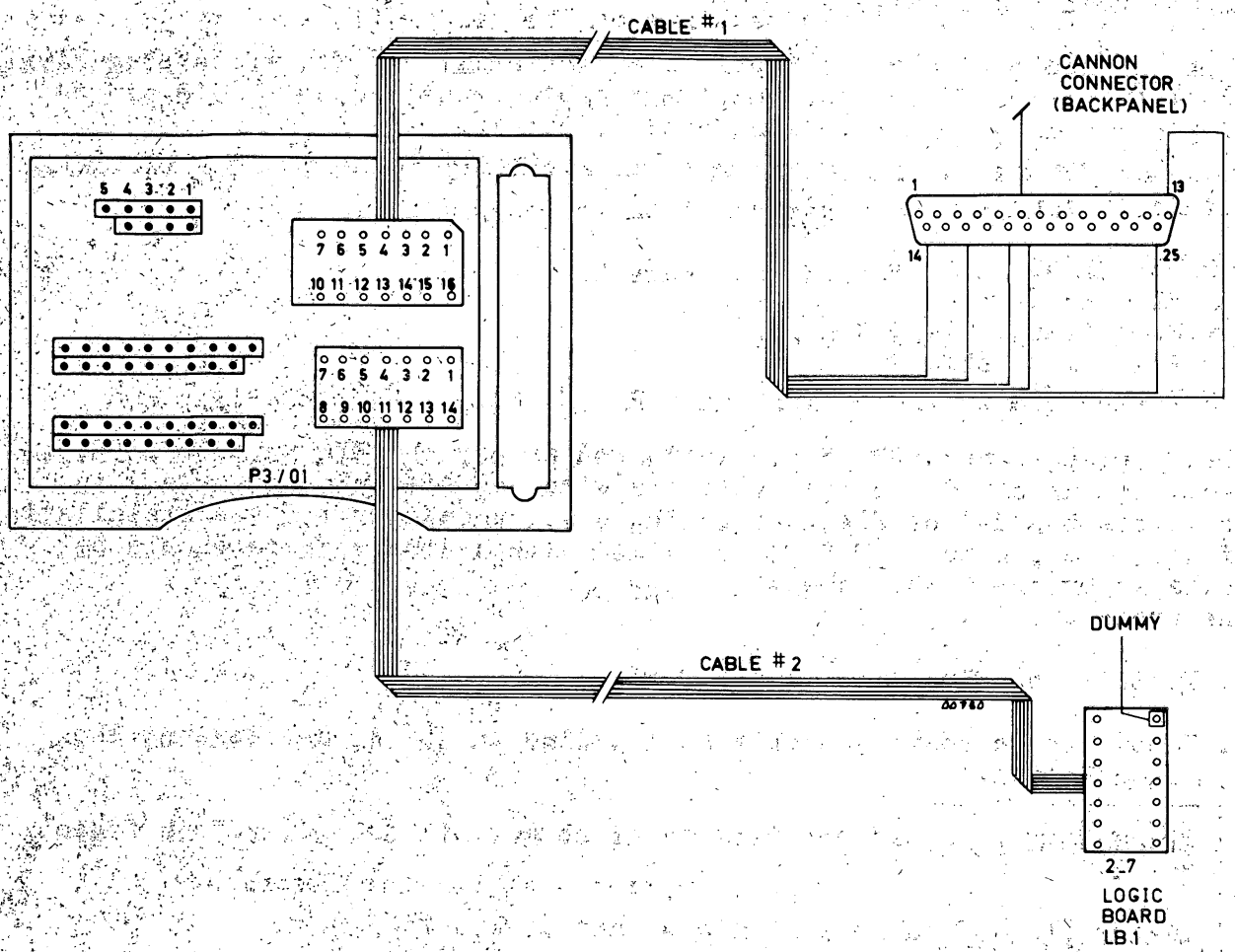
CABLE #1
CANNON
CONNECTOR
(BACKPANEL)
1
13
14
25
5 4 3 2 1
7 6 5 4 3 2 1
10 11 12 13 14 15 16
7 6 5 4 3 2 1
8 9 10 11 12 13 14
P3/01
DUMMY
CABLE #2
2.7
LOGIC
BOARD
LB.1

Figure 5-6

5.5.6 Keyboard National Variants (Figure 5.1)

Figure 5.1 gives the strap settings on the header (located at pos. 11 on the keyboard p.c.b.) for particular national versions. The installation procedure is,

a. Remove top cover.

b. Remove header from position II on keyboard p.c.b.

c. Wire header as detailed in figure 5.1.

d. Replace header and top cover.

To replace the character generator R.O.M. steps the procedure is,

a. Remove logic Board Assembly (see 5.3.2. step d).

b. Uncover components of Logic Board 2.

c. Remove R.O.M. at location 5-2 and replace with new R.O.M.

d. Replace Logic Board Assembly.

5122 211 32140

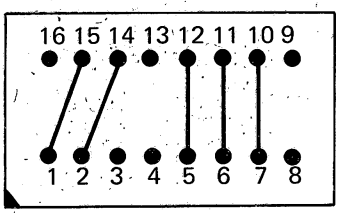

France, Switzerland, Belgium, Luxemburg.

5122 211 32120

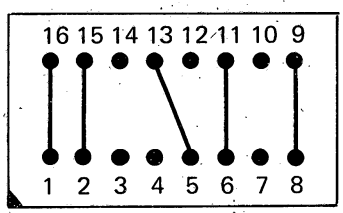

Sweden, Finland, Italy, Switzerland, Spain, Mexico, Argentinia, Venezuela, Danmark, Norway, USA, Canada, Australia, Portugal, Brazil, Yugoslavia, Great Britain, Netherlands, South Africa, Belgium, New Zealand.

5122 211 32130

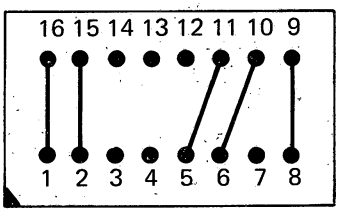

Germany, Austria, Luxemburg, Switzerland.

Figure 5-7

PHILIPS

Hardware - Beschreibung

N-Pad-Keyboard

Alle Rechte ausdrücklich vorbehalten
Vervielfältigung oder Mitteilung an Dritte
gleich gültig in welcher Form ist ohne schriftliche
Genehmigung des Eigentümers nicht gestattet

PHILIPS

Inhaltsverzeichnis

		Seite
	Abbildung N-Pad-Keyboard	1
1.	Allgemeines	2
1.1	Modifikationsmöglichkeiten	3 - 4
2.	Funktionsweise-Einfachzeichen	5 - 6
3.	Funktionsweise-Doppelzeichen	6
4.	Programmierung des ROM (7488/8223/28S23)	7
5.	Technische Angaben	8
6.	Impulspläne	9 - 10

Alle Rechte auszugsweise vorbehalten
Vervielfältigung oder Mitteilung an Dritte
gleichgültig in welcher Form ist ohne schriftliche
Genehmigung des Eigentümers nicht gestattet

PHILIPS

Abbildung N-Pad-Keyboard

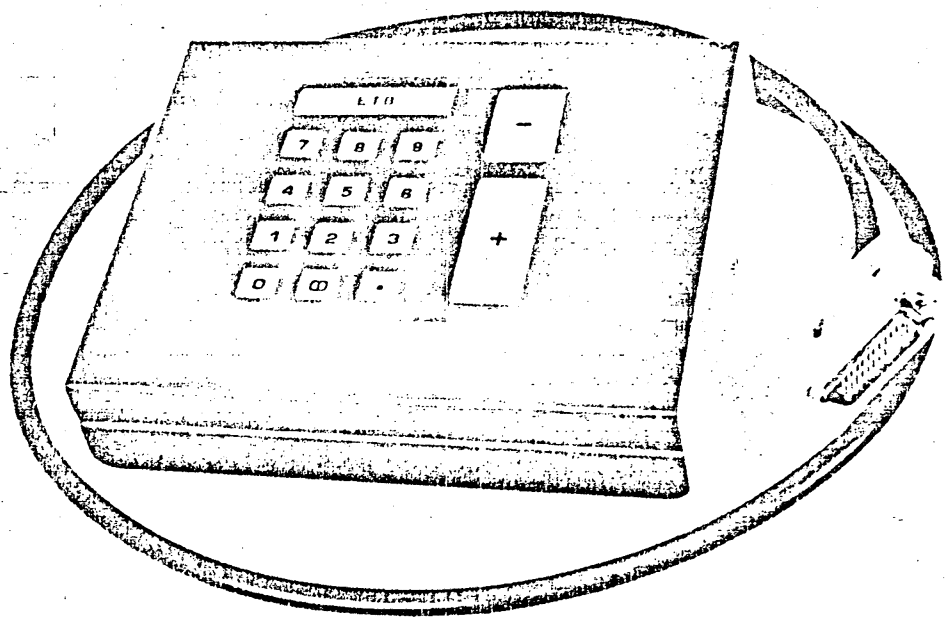

Alle Rechte ausdrücklich vorbehalten
Vervielfältigung oder Mitteilung an Dritte gleichgültig in welcher Form ist ohne schriftliche Genehmigung des Eigentümers nicht gestattet

N-Pad-Keyboard

1. Allgemeines:

Das N-pad-keyboard ist eine numerische Tastatur mit den Zusatztasten +, -, . oder , , 00 und ETB.

Über eine V24 Schnittstelle ist eine Verbindung mit anderen Geräten, z.B. Display terminal (P 2740), möglich.

Für den Betrieb der Tastatur wird ein externer Synchronisiertakt und eine externe Spannungsversorgung benötigt (über V24 Stecker).

Als Tastencode ist der ASCII programmiert, ein beliebiger bis 7 bit gehender Code kann jedoch durch ROM-Programmierung erzeugt werden. Mit der Tastatur ist ein 'two-key-roll over' Betrieb möglich.

Alle Rechte ausdrücklich vorbehalten
Vervielfältigung oder Mitteilung an Dritte
gleichgültig in welcher Form ist ohne schriftliche
Genehmigung des Eigentümers nicht gestattet

1.1 Modifikationsmöglichkeiten

1.1.1 Code: programmiert ASC II

1.1.2 Shift: Über die Brücke am ROM (W1) ist ein Shift in die obere ROM-Ebene (16 Worte) möglich. Damit ist eine prinzipielle Shiftmöglichkeit für alle Tasten gegeben.

1.1.3 Tasten: Die Grundversion der Tastatur ist die Ausführung mit Kommataste (Brücke von P1 → P2). Der Tastenplatz der Kommataste kann jedoch durch die Brücke P1 → P3 die Kodierung Dezimalpunkt erhalten. Soll sowohl Komma- als auch Dezimalpunkt vorhanden sein, muß der unter ETB-Tastenabdeckung liegende Bestückungsplatz für eine zusätzliche Taste benutzt werden.

Mit einer Brücke P1 → P2 sind dann beide Testcodierungen möglich.

In der Printausführung N-pad 02 kann die +Taste den Code ETB erhalten. Dazu müssen die Brücken entsprechend Schaltbild gelegt werden.

Alle Rechte ausdrücklich vorbehalten
Vervielfältigung oder Mitteilung an Dritte gleichgültig in welcher Form ist ohne schriftliche Genehmigung des Eigentümers nicht gestattet

1.1.4 UART:

Brücke	Funktion	Grundversion	Brücke	Modifikation
W2	Wortlänge	7 bit	zu	8 bit
W3	Parity	Parity	zu	kein Parity
W4	Stopbits	2 bit	offen	1 bit
W5	Parity select	even	offen	odd

1.1.5 Doppelzeichen: Durch 'L' Programmierung des Bits in der 8. ROM-Spalte kann jede Taste mit Doppelzeichenfunktion ausgeführt werden.

Beim Öffnen der Brücken W1 oder W2 muß ein 10 K Widerstand in den vorgesehenen Bestückungsplatz gelötet werden.

Alle Rechte ausdrücklich vorbehalten
Vervielfältigung oder Mitteilung an Dritte
gleichgültig in welcher Form ist ohne schriftliche
Genehmigung des Eigentümers nicht gestattet

N-Pad-Keyboard Blockschaltbild

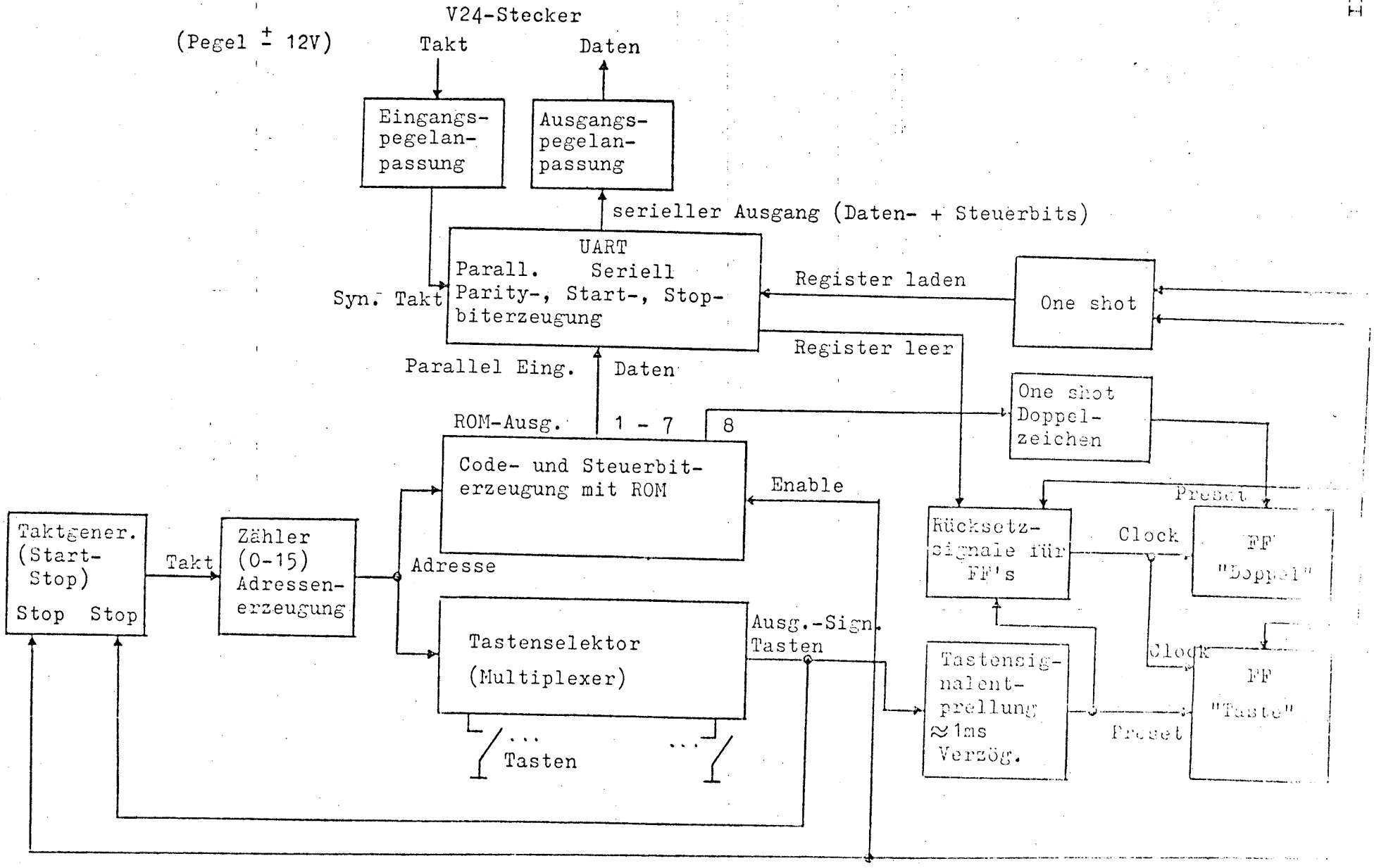

2. Funktionsweise - Einfachzeichen

Für den Funktionsablauf der Tastatur ist ein interner Taktgenerator vorhanden. Seine Taktfrequenz soll im Bereich von 50 KHz ⟶100 KHz liegen.

Gestoppt werden kann der Oszillator vom Ausgang 'W' des Datenselektors oder von dem FF "Taste" nach der Prellzeit der Tasten.

Ist keine Taste mehr betätigt und sind auch die zugehörigen Prozeduren abgeschlossen, läuft der Taktgenerator. Die Takte gelangen auf einen Zähler,der fortlaufend die binären Adressen von 0⟶15 erzeugt, die am ROM und Datenselektor anliegen. Am Ausgang des ROM erfolgen keine Aktivitäten, da es disabled ist.

Im Datenselektor werden die Tasten nacheinander je eine Taktperiode lang invertiert auf den Ausgang 'W' geschaltet. (Um die in der P300/400-Serie gebräuchlichen Tasten an TTL-Bausteinen zu verwenden, wurde hier auf die übliche Matrixanordnung verzichtet.) Ist keine Taste betätigt, erscheint hier ein 'L'-Signal. Bei Betätigung und Selektion einer Taste wird der Ausgang 'H', somit wird der Oszillator gestoppt und die Adresse der betätigten Taste festgehalten. Der Ausgang 'W' bleibt solange 'H' wie die Taste betätigt ist.

Parallel dazu gelangt das Signal vom Ausgang 'W' auf einen Tiefpass, in dem Tastenpreller ausgefiltert werden. Dabei wird der Impuls um etwa 1ms verzögert. Ist die Tastenbetätigungszeit kleiner als die Verzögerungszeit, wird der Oszillator zwar kurz angehalten, läuft aber dann sofort wieder an. Bei größerer Tastenbetätigungszeit wird mit dem verzögerten Impuls das FF 'Taste' gesetzt.

Dieses stoppt den Generator nun unabhängig von der weiteren Tastenbetätigung und [illegible]bled das ROM.

Alle Rechte ausdrücklich vorbehalten
Vervielfältigung oder Mitteilung an Dritte gleichgültig in welcher Form ist ohne schriftliche Genehmigung des Eigentümers nicht gestattet

Der Impuls aus dem Tiefpass gelangt nach einer weiteren kurzen Verzögerung zu einem Differenzierglied. Mit diesem wird unabhängig von der Tastenbetätigungszeit ein Registerladeimpuls von etwa 500ns erzeugt, der den bereitgestellten Tastencode vom ROM in den UART-Baustein speichert.

Über den Ausgang TBRL meldet der UART, daß sein Auffangregister geladen ist. Intern lädt er nun das Auffangregister in ein Senderegister und nimmt anschließend das Signal TBRL wieder zurück. Ist das Signal TBRL nicht mehr vorhanden und die Taste nicht mehr betätigt, wird das FF 'Taste' zurückgesetzt.

Gleichzeitig damit wird das Code-ROM disabled und der Taktgenerator gestartet.

Alle Rechte ausdrücklich vorbehalten
Vervielfältigung oder Mitteilung an Dritte gleichgültig in welcher Form ist ohne schriftliche Genehmigung des Eigentümers nicht gestattet

3. Funktionsweise-Doppelzeichen

Doppelzeichen werden zunächst (s.A. 2.1) wie Einfachzeichen behandelt.

Bei einem Doppelzeichen liefert der Ausgang 8 des enabled ROM ein 'L' Signal. Dieses wird differenziert und zum Setzen des FF 'Doppel' benutzt. Mit dem Setzen des FF 'Doppel' wird das FF 'Taste' verriegelt. Ein Rücksetzen des FF 'Taste' ist also erst möglich, wenn das FF 'Doppel' zurückgesetzt ist.

Über den Ausgang des FF 'Doppel' wird gleichzeitig mit Hilfe einer Zeitkonstante simuliert, daß keine Taste mehr betätigt ist. Damit wird erreicht, daß nach dem Laden und Freiwerden des UART-Auffangregisters (Funktionsablauf wie Einfachzeichen s.A. 2.2), also mit dem Ende des TBRL Signals, das FF 'Doppel' zurückgesetzt wird. Die Rücksetzflanke des FF 'Doppel' wird nun differenziert und zum erneuten Laden des UART-Auffangregisters benutzt. Die Zeitkonstante der Simulation 'keine Taste mehr betätigt' ist in der Zwischenzeit abgelaufen. Da auch die Verriegelung des FF 'Taste' nicht mehr vorhanden ist, kann nun bei den Signalen $\overline{\text{TBRL}}$ und 'Taste nicht mehr betätigt' das FF 'Taste' zurückgesetzt werden. Damit wird das Code-ROM wieder disabled und der Taktgenerator gestartet.

4. Programmierung des ROM (7488/8223/28S23)

7 bit ASC II Code, Doppelnull, kein Shift

Ausgang →		8	7	6	5	4	3	2	1
Zeichen	Adresse								
0	0	H	L	H	H	L	L	L	L
1	1	H	L	H	H	L	L	L	H
2	2	H	L	H	H	L	I	H	L
3	3	H	L	H	H	L	L	H	H
4	4	H	L	H	H	L	H	L	L
5	5	H	L	H	H	L	H	L	H
6	6	H	L	H	H	L	H	H	L
7	7	H	L	H	H	L	H	H	H
8	8	H	L	H	H	H	L	L	L
9	9	H	L	H	H	H	L	L	H
00	10	L	L	H	H	L	L	L	L
+	11	H	L	H	L	H	L	H	H
-	12	H	L	H	L	H	H	L	H
,	13	H	L	H	L	H	H	L	L
.	14	H	L	H	L	H	H	H	L
ETB	15	H	L	L	H	L	H	H	H

Ausgang 8 beinhaltet die Programmierung für Doppelzeichen.

Alle Rechte ausdrücklich vorbehalten
Veranstaltung oder Weitergabe an Dritte
gleichgültig in welcher Form, ist ohne schriftliche
Genehmigung des Eigentümers nicht gestattet

5. Technische Angaben

5.1 Spannungsversorgung

+5V ± 5%	Imax. = 350 mA	} Versorgung über V24 Stecker
+12V ± 5%	Imax. = 17 mA	
-12V ± 5%	Imax. = 22 mA	

5.2 Externe Synchron-Taktfrequenz

DC ⟶ 200 KHz

Alle Rechte ausdrücklich vorbehalten
Vervielfältigung oder Mitteilung an Dritte gleichgültig in welcher Form ist ohne schriftliche Genehmigung des Eigentümers nicht gestattet

5.3 Signalpegel (theor.)

N-Pad als Empfänger
U Eing. ± 12V (U Eing. min. ± 3V U Eing. max. ± 25V)

N-Pad als Sender
U Ausg. ± 12V (U Ausg. min. ± 5V U Ausg. max. ± 25 V)

5.4 Betriebsbedingungen

Der Eingangswiderstand soll bei 3 - 15 V angelegter Spannung zwischen 3K ⟶ 7K Ω liegen.
Die externe Kapazität darf 2500pF nicht überschreiten.

Alle Rechte ausdrücklich vorbehalten
Vervielfältigung oder Mitteilung an Dritte,
gleichgültig in welcher Form, ist ohne schriftliche
Genehmigung des Eigentümers nicht gestattet

PHILIPS

Tastenzeit TBR: Zeit/Taste betätigt b.Selektion/Tastenzeit TBR: Zeit/Taste betätigt v.Selekt.

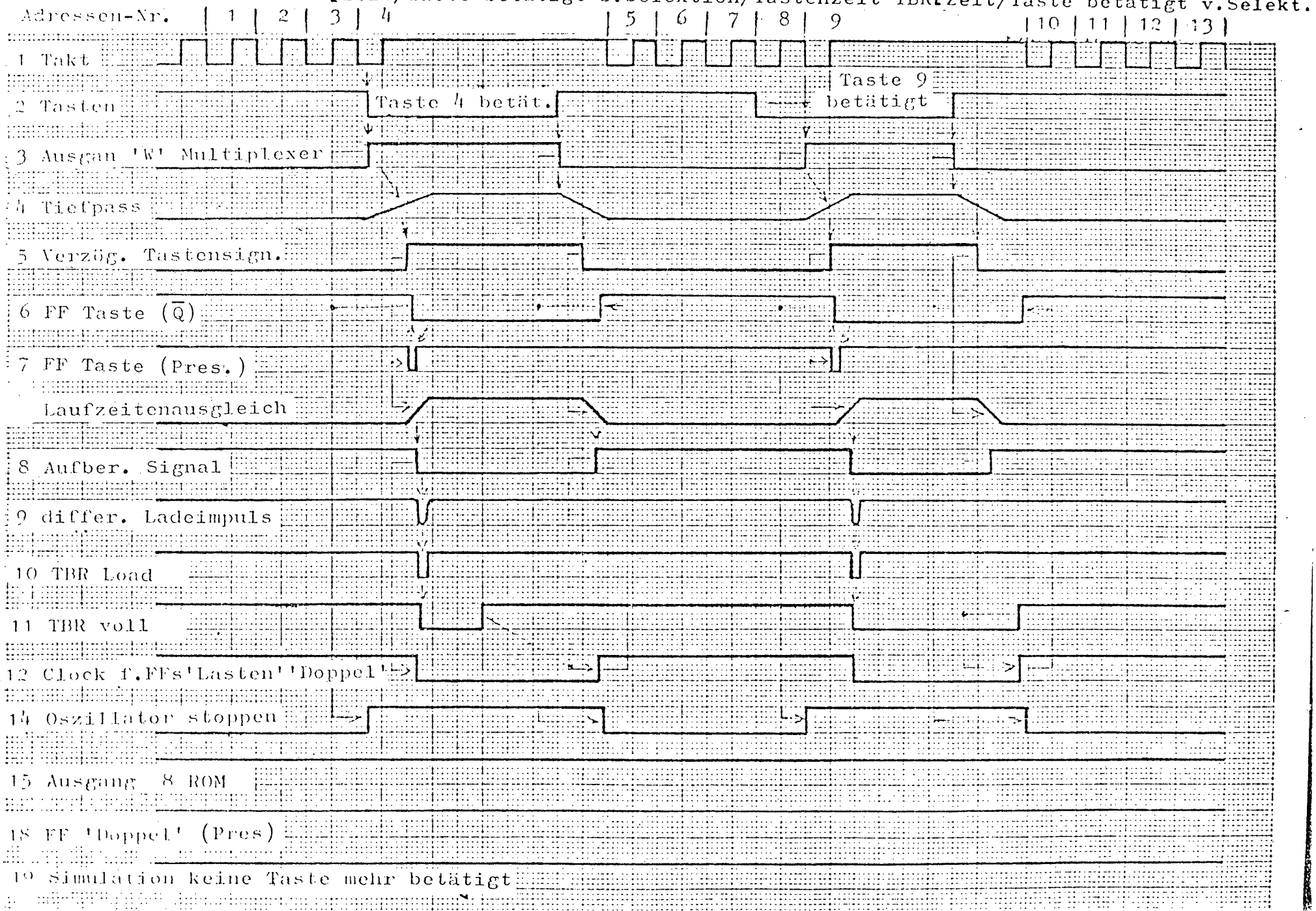

Alle Rechte ausdrücklich vorbehalten
Vervielfältigung oder Mitteilung an Dritte
gleichgültig in welcher Form ist ohne schriftliche
Genehmigung des Eigentümers nicht gestattet

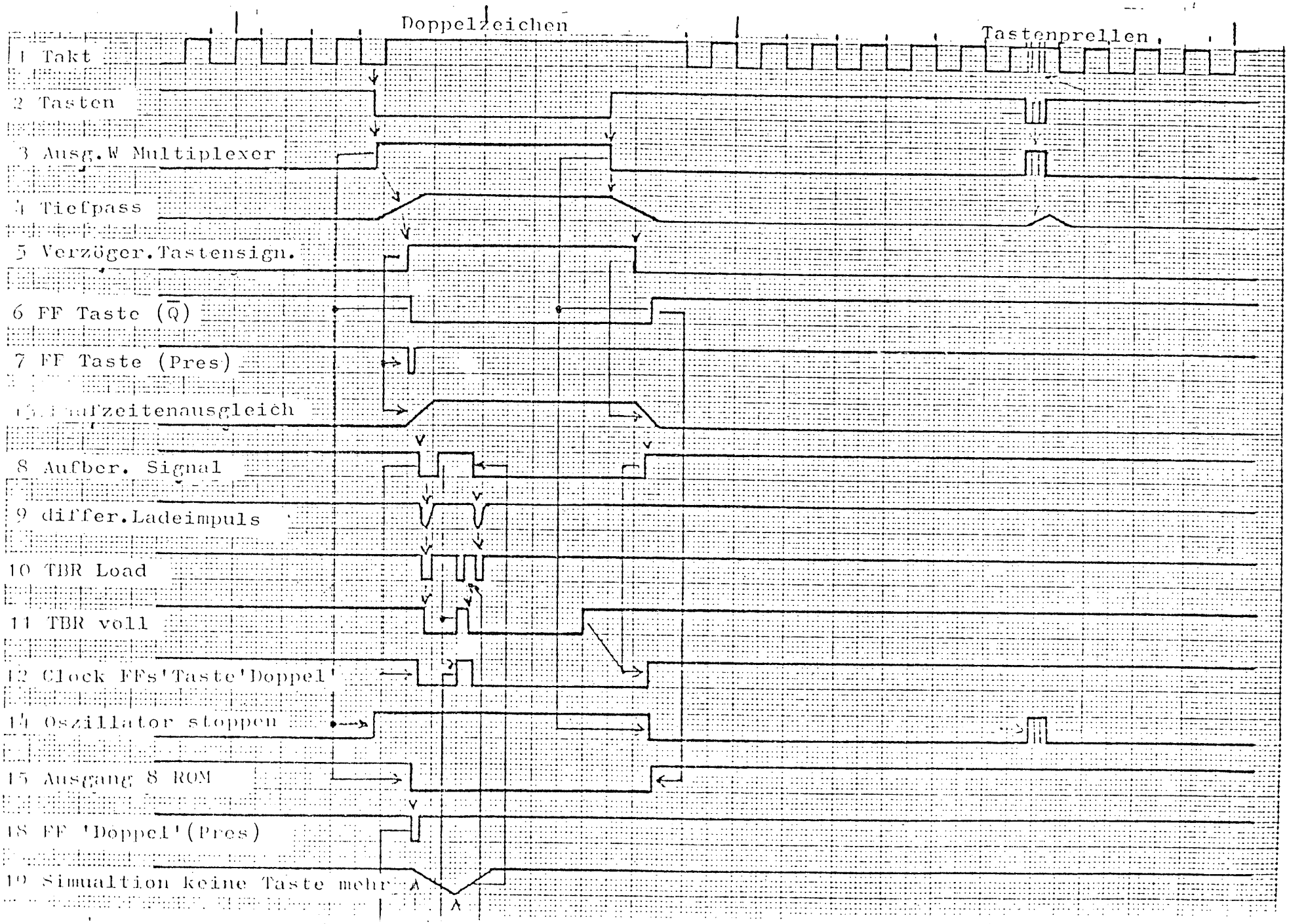

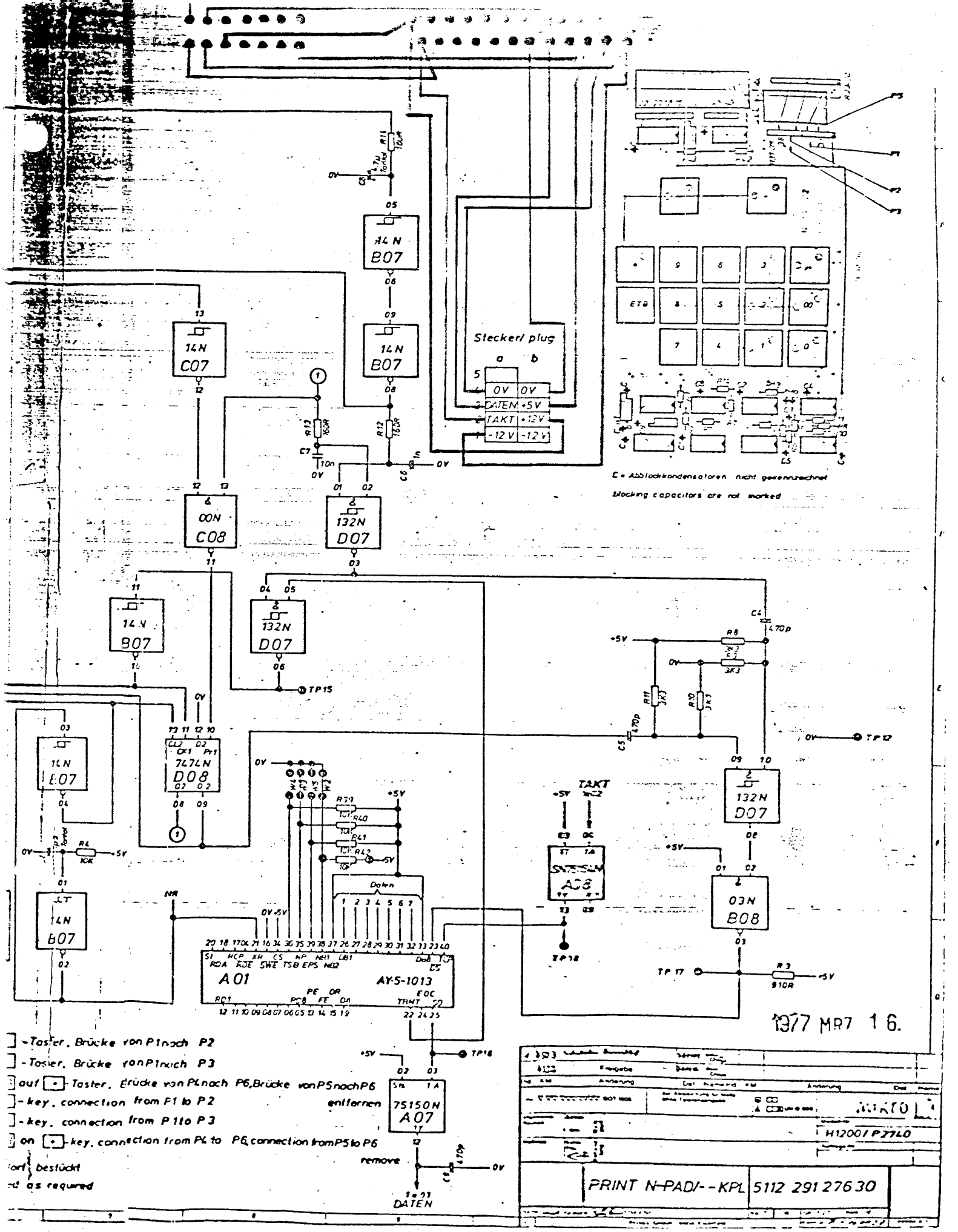

] -Taster, Brücke von P1 nach P2
] -Taster, Brücke von P1 nach P3
] auf [•] -Taster, Brücke von P4 nach P6, Brücke von P5 nach P6 entfernen
] -key, connection from P1 to P2
] -key, connection from P1 to P3
] on [•] -key, connection from P4 to P6, connection from P5 to P6
ort } bestückt
d as required

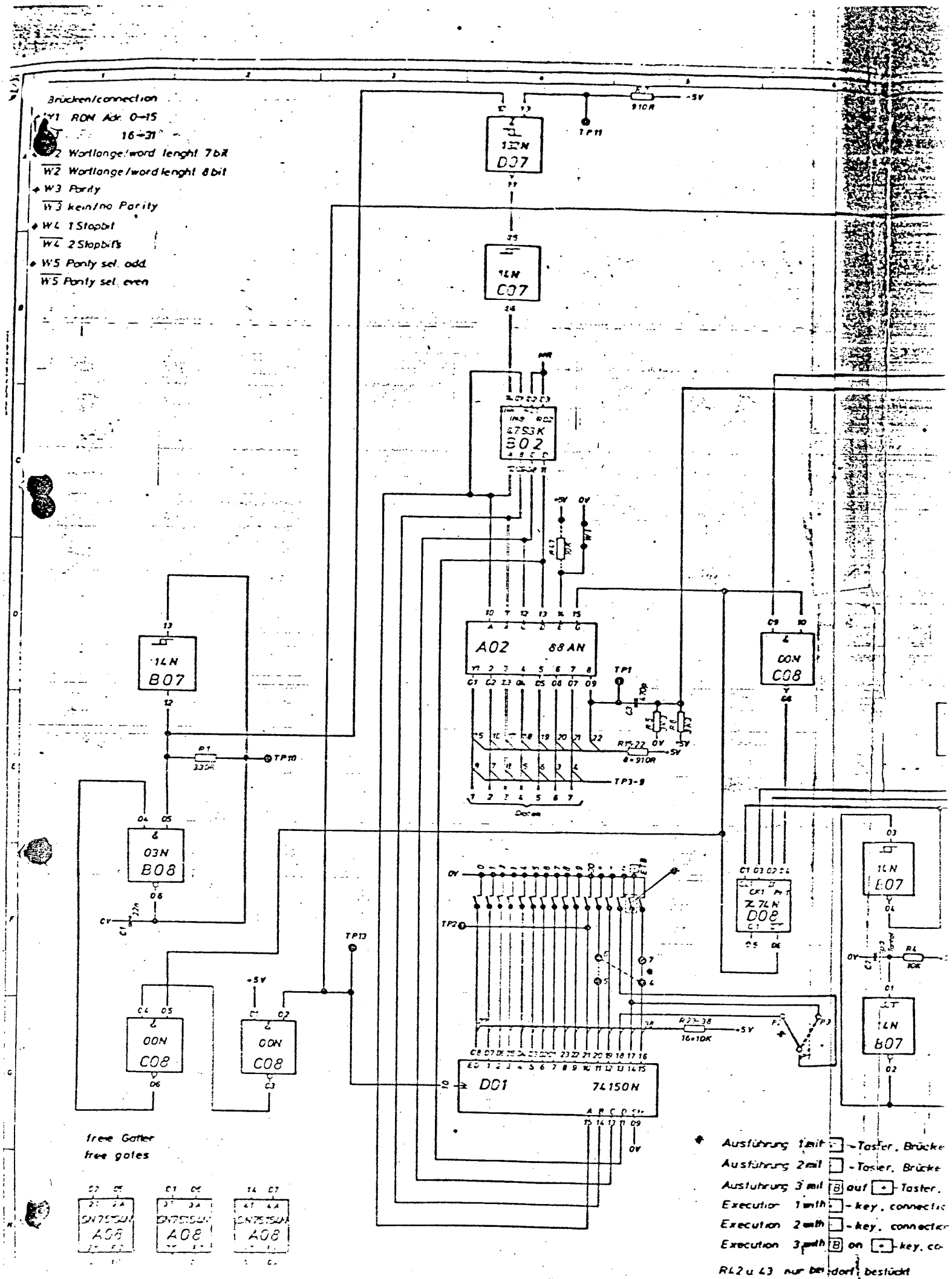

Brücken/connection
W1 ROM Adr. 0–15
16–31
W2 Wortlänge/word lenght 7 bit
W2 Wortlänge/word lenght 8 bit
W3 Parity
W3 kein/no Parity
W4 1 Stopbit
W4 2 Stopbits
W5 Parity sel. odd
W5 Parity sel. even
132N D07
14N C07
47S3K B02
A02 88AN
14N B07
03N B08
00N C08
00N C08
00N C08
74N D08
14N B07
14N B07
D01 74150N
TP1
TP2
TP3-9
TP10
TP11
TP13
910R
330R
16×10K
R23-38
R4 10K
+5V
0V
free Gatter
free gates
SN75154N A08
SN75154N A08
SN75154N A08
Ausführung 1 mit - Taster, Brücke
Ausführung 2 mit - Taster, Brücke
Ausführung 3 mit B auf + Taster,
Execution 1 with - key, connectio
Execution 2 with - key, connectio
Execution 3 with B on + key, co
R42 u 43 nur bei dort bestückt
R42 u 43 only mitted as required

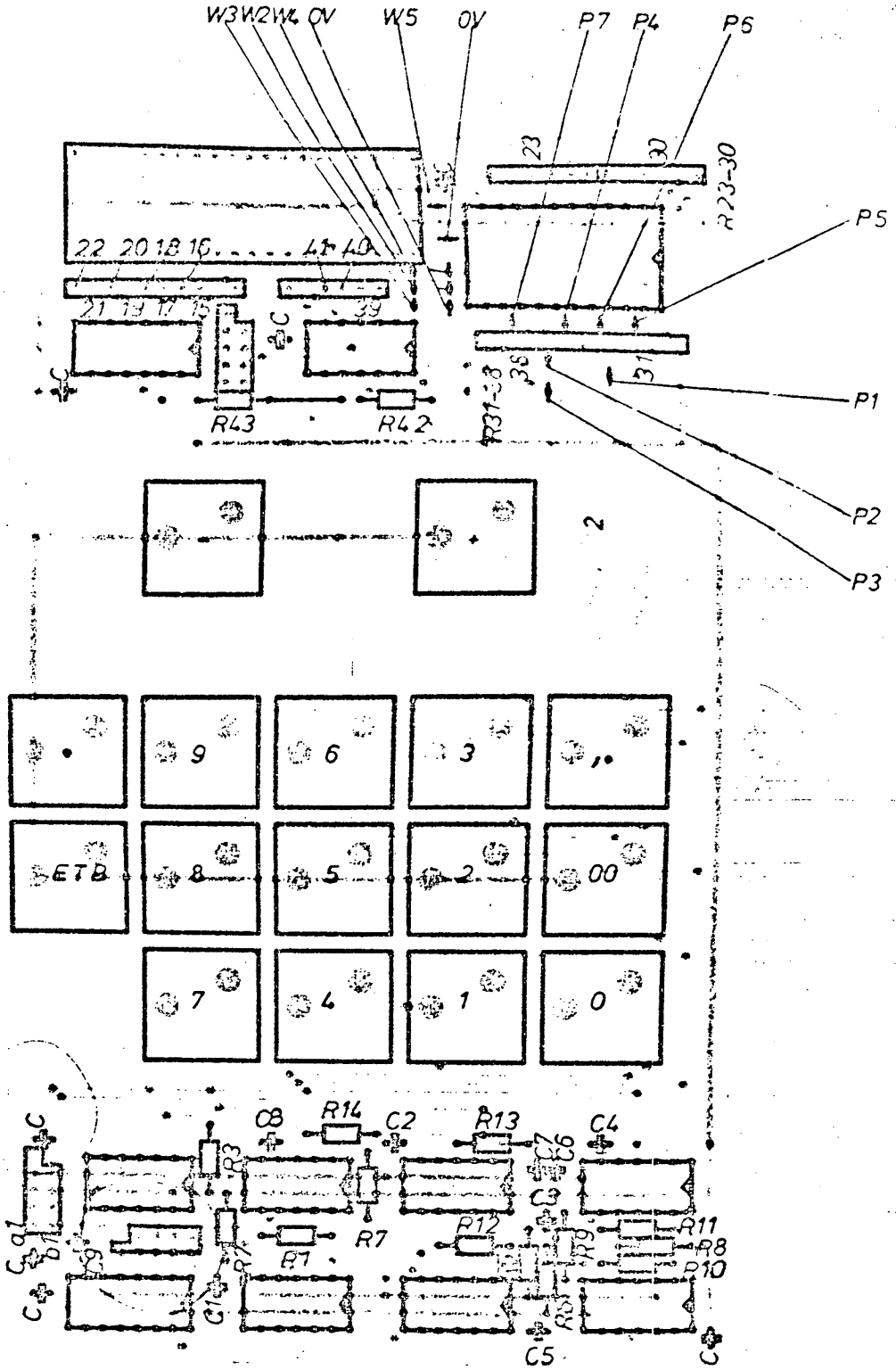

Stecker/ plug

	a	b
5		
4	0V	0V
3	DATEN	+5V
2	TAKT	+12V
1	-12V	-12V

C = Abblockkondensatoren nicht gekennzeichnet

blocking capacitors are not marked

C4

CCITT V24	≤ -3V ≥ -12V	≥ +3V ≤ +12V
Binary value	1	0
Data circuit	mark	space
Timing/Control circuit	OFF	ON

OPERATION WITHOUT DATA CIRCUIT EQUIPMENT

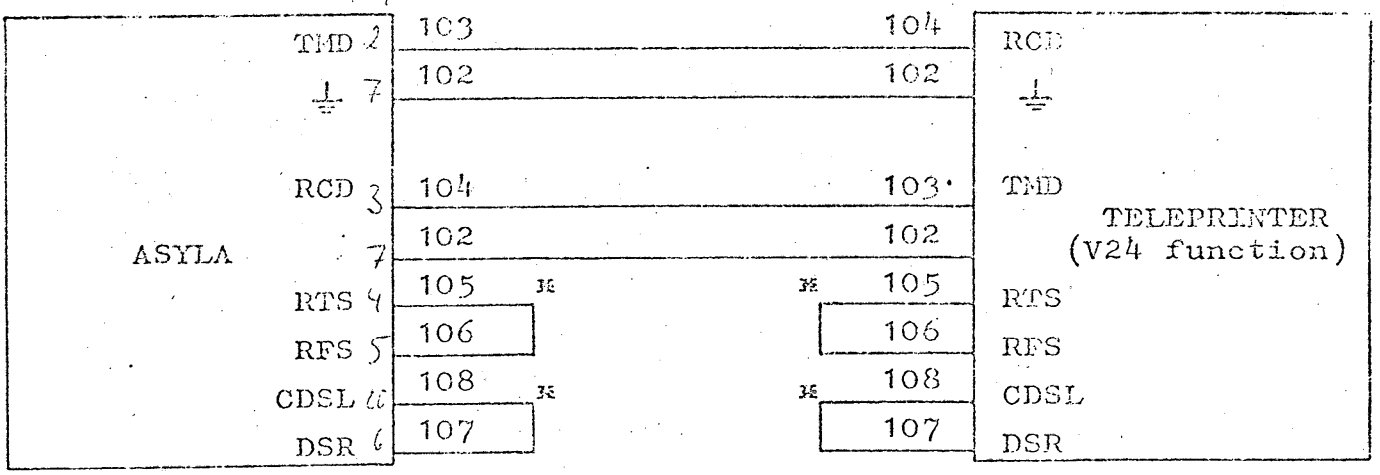

* Interconnections in plug. Plugs at ASYLA and terminal are interchangeable.

Figure 4 OPERATION WITHOUT DCE

For short distance inplant connections (< 1000 m), the relevant interchange circuits on control unit and teleprinter side are connectable directly without DCE in between. This is only applicable to the ASYLA.
The electrical characteristics of the interchange circuits shall allow a transmission performance comparable to that for a link with DCE.

CCITT V24	≤ -3V ≥ -12V	≥ +3V ≤ +12V
Binary value	1	0
Data circuit	mark	space
Timing/Control circuit	OFF	ON

OPERATION WITHOUT DATA CIRCUIT EQUIPMENT

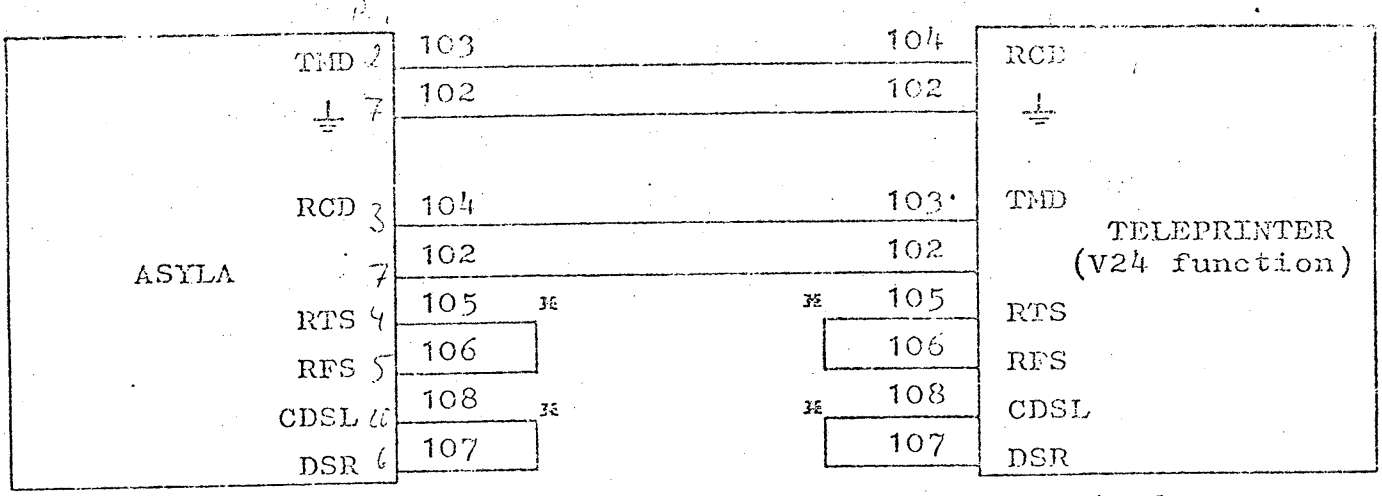

⋇ Interconnections in plug. Plugs at ASYLA and terminal are interchangeable.

Figure 4 OPERATION WITHOUT DCE

For short distance inplant connections (< 1000 m), the relevant interchange circuits on control unit and teleprinter side are connectable directly without DCE in between. This is only applicable to the ASYLA.
The electrical characteristics of the interchange circuits shall allow a transmission performance comparable to that for a link with DCE.

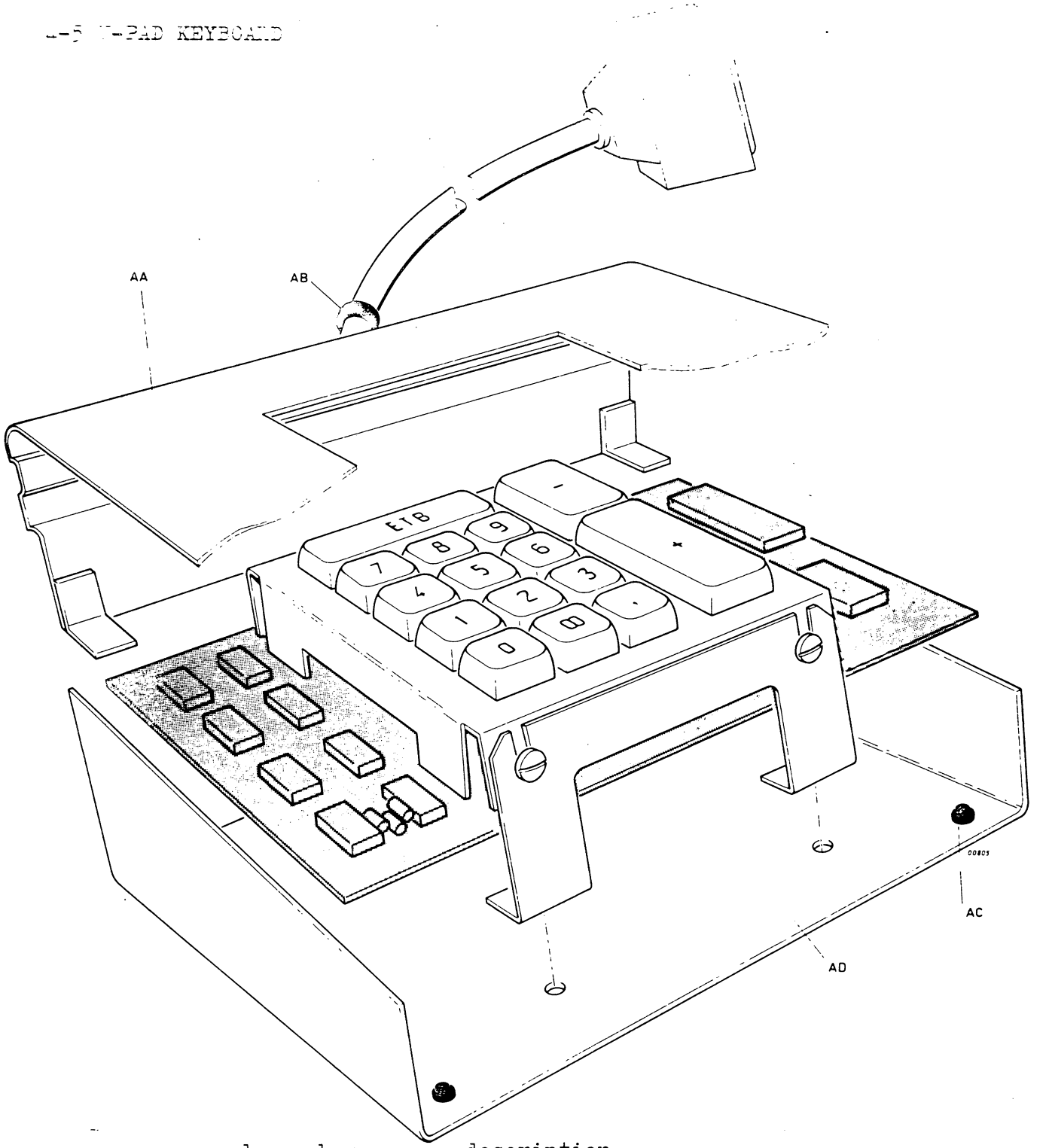

pos.	code number	description
AA	5322 447 84689	cover
AB	5322 325 64078	grommet
AC	5322 462 44321	buffer
AD	5322 447 84688	base plate
	5322 414 24884	keytop 1
	5322 414 24985	keytop 2
	5322 414 24986	keytop 3
	5322 414 24987	keytop 4
	5322 414 24991	keytop 5
	5322 414 24988	keytop 6

	code number	description
	5322 414 24989	keytop 7
	5322 414 24992	keytop 8
	5322 414 24993	keytop 9
	5322 414 24848	keytop 0
	5322 414 25004	keytop 00
	5322 414 25007	keytop -
	5322 414 25006	keytop +
	5322 414 25849	keytop ,
	5322 414 25847	keytop ETB
	5322 414 25846	keytop .
	5322	cable clamp
miscellaneous		
	5322 322 44004	cable 14 x 0,14
	5322 265 50038	connect 25 poles
	5322 267 74002	connector black 20 poles
	5322 268 24041	contact bush
	5322 462 44161	polarizing plug
	5322 268 44123	cover
		cable N-pad
	5322 290 44033	cable tag
logic board		
IC's	5322 209 84528	SN7400N
	5322 209 84529	SN7403N
	5322 209 84515	SN7414N
	5322 209 84165	SN7474N
	5322 209 85664	SN7488N/N-pad
	5322 209 84929	SN7493N
	5322 209 84341	SN74132N
	5322 209 84034	SN74150N
	5322 209 84809	SN75150N
	5322 209 84811	SN75154N
	5322 209 84992	AY-5-1013
	5322 209 84593	ERC1179A
	5322 209 84914	33102
various parts		
	5322 276 14178	key
	5322 414 25036	cover plate
	5322 265 64031	connector